PROJECT ID: 6996-05-07
WITH: 6996-05-12

COUNTY: COLUMBIA

ORDER OF SHEETS

Section No.	1	Title
Section No.	2	Typical Sections and Details
Section No.	3	Estimate of Quantities
Section No.	3	Miscellaneous Quantities
Section No.	4	Right of Way Plat
Section No.	5	Plan and Profile
Section No.	6	Standard Detail Drawings
Section No.	7	Sign Plates
Section No.	8	Structure Plans
Section No.	9	Computer Earthwork Data
Section No.	9	Cross Sections
Section No.	10	Dredge Spot Disposal Area

TOTAL SHEETS =

STATE OF WISCONSIN
DEPARTMENT OF TRANSPORTATION

PLAN OF PROPOSED IMPROVEMENT

STATE PROJECT	FEDERAL PROJECT	
	PROJECT	CONTRACT
6996-05-07		
6996-05-12		

PORTAGE CANAL RESTORATION
(WISCONSIN RIVER TO ADAMS STREET)
CITY OF PORTAGE
NON-HIGHWAY
COLUMBIA COUNTY

STATE PROJECT NUMBER
6996-05-07

PORTAGE CANAL RESTORATION
(WISCONSIN RIVER LOCK MODIFICATION)
CITY OF PORTAGE
NON-HIGHWAY
COLUMBIA COUNTY

STATE PROJECT NUMBER
6996-05-12

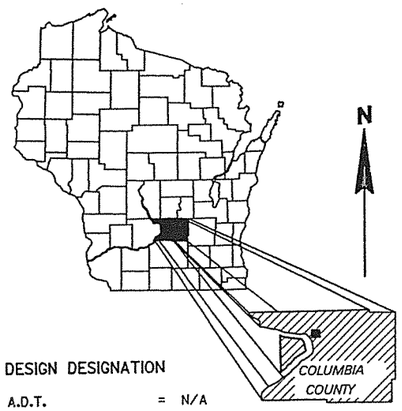

DESIGN DESIGNATION

A.D.T.	=	N/A
A.D.T.	=	N/A
D.H.V.	=	N/A
D.D.	=	N/A
T.	=	N/A
DESIGN SPEED	=	N/A
ESALS	=	N/A

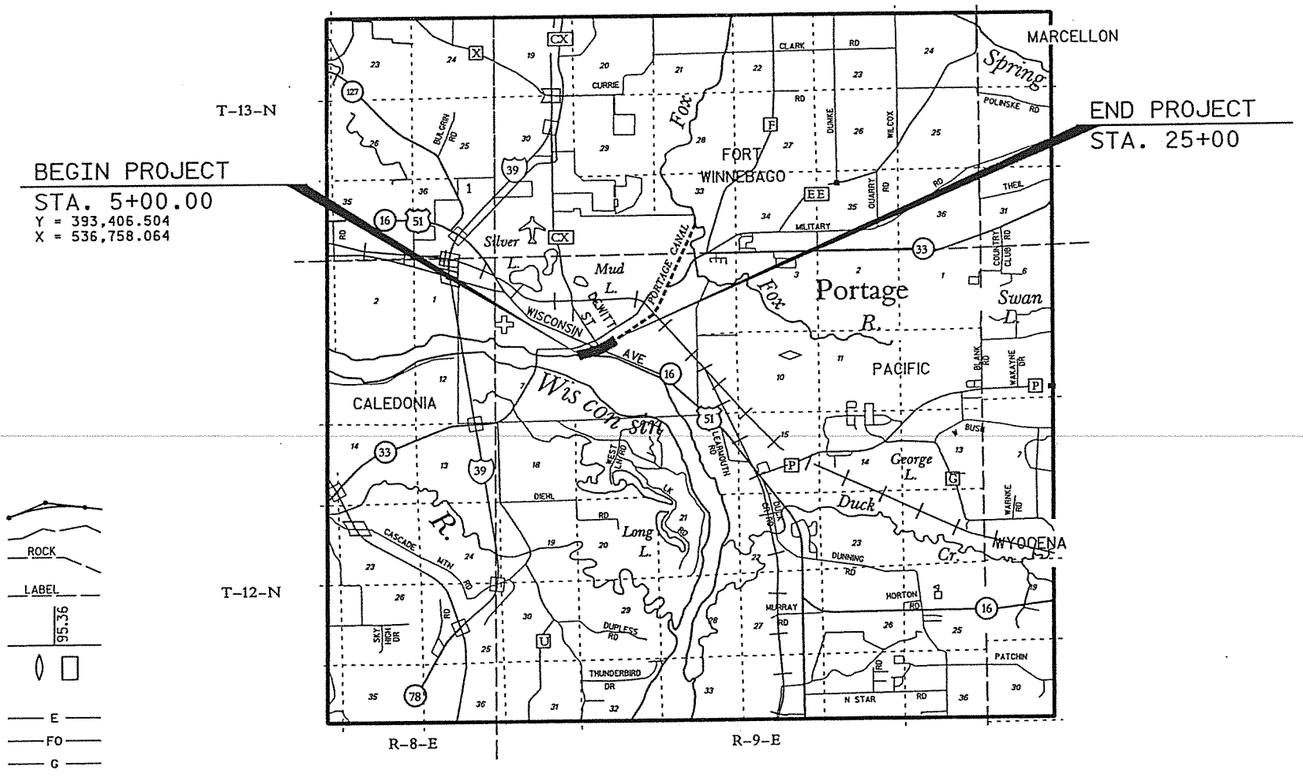

LAYOUT
SCALE 0 1 Mi.

"Coordinates on this plan are referenced to the Wisconsin County Coordinate System (WCCS), COLUMBIA County

TOTAL NET LENGTH OF CENTERLINE = 0.380 Mi.

CONVENTIONAL SYMBOLS

PLAN
- CORPORATE LIMITS
- PROPERTY LINE
- LOT LINE
- LIMITED HIGHWAY EASEMENT
- EXISTING RIGHT OF WAY
- PROPOSED OR NEW R/W LINE
- SLOPE INTERCEPT
- REFERENCE LINE
- EXISTING CULVERT
- PROPOSED CULVERT (Box or Pipe)
- COMBUSTIBLE FLUIDS (CAUTION)
- MARSH AREA
- WOODED OR SHRUB AREA

PROFILE
- GRADE LINE
- ORIGINAL GROUND
- MARSH OR ROCK PROFILE (To be noted as such) (ROCK)
- SPECIAL DITCH (LABEL)
- GRADE ELEVATION (95.36)
- CULVERT (Profile View)

UTILITIES
- ELECTRIC (E)
- FIBER OPTIC (FO)
- GAS (G)
- SANITARY SEWER (SAN)
- STORM SEWER (SS)
- TELEPHONE (T)
- WATER (W)
- UTILITY PEDESTAL
- POWER POLE
- TELEPHONE POLE

ACCEPTED FOR
CITY of PORTAGE
10/27/05 (Date) (MAYOR)

MEAD & HUNT
ENGINEERS
ARCHITECTS
SCIENTISTS
PLANNERS

WISCONSIN
RUSSELL A. CHESMORE
E-26272
VERONA
WI
PROFESSIONAL ENGINEER
10/21/05

STATE OF WISCONSIN
DEPARTMENT OF TRANSPORTATION

PREPARED BY

Surveyor	MEAD & HUNT
Designer	MEAD & HUNT
Management Consultant	KJOHNSON ENGINEERS
C.O. Examiner	

APPROVED FOR REGIONAL OFFICE

DATE: _____ (Signature)

E

PLOT NAME: PLOT SCALE: 10000.0000 ft / IN. SHEET 10

GENERAL NOTES

NO TREES OR SHRUBS ARE TO BE REMOVED WITHOUT THE APPROVAL OF THE ENGINEER.

ELEVATIONS SHOWN ON THE PLANS ARE REFERENCED TO THE WISCONSIN COUNTY COORDINATE SYSTEM (WCCS), COLUMBIA COUNTY.

LIMITED EASEMENTS FOR CONSTRUCTION HAVE BEEN OBTAINED AND THESE RIGHTS HAVE BEEN EXTENDED TO THE CONTRACTOR.

THE LOCATIONS OF EXISTING AND PROPOSED UTILITY INSTALLATIONS AS SHOWN ON THE PLANS ARE APPROXIMATE. THERE MAY BE OTHER UTILITY INSTALLATIONS WITHIN THE PROJECT AREA THAT ARE NOT SHOWN.

EROSION CONTROL FEATURES AS SHOWN IN THE PLANS, ARE AT SUGGESTED LOCATIONS.

AREAS DISTURBED WITHIN THE RIGHT OF WAY, EXCEPT AREAS WITHIN THE FINISHED SHOULDER POINTS, SHALL BE TOPSOIL, SEED AND FERTILIZED AS DIRECTED BY THE ENGINEER IN THE FIELD. SEED MIXTURE USED SHALL BE NO. 40.

DRAIN PIPE ELEVATIONS, LENGTHS AND LOCATIONS AS SHOWN ON THE PLANS, MAY BE ADJUSTED TO FIT FIELD CONDITIONS.

NUMBER, LOCATION, AND SPACING OF SIGNS AND TRAFFIC CONTROL DEVICES, AS SHOWN IN THE PLANS, SHALL BE ADJUSTED TO FIT FIELD CONDITIONS.

3-INCH ASPHALTIC SURFACE SHALL BE CONSTRUCTED WITH ONE (1) 3-INCH LIFT.

HMA PAVEMENT CALCULATIONS ARE BASED ON 115 lb/sy/in.

FILL AS SHOWN ON THE PLANS PERTAINS TO EMBANKMENT CONSTRUCTED FROM BORROW EXCAVATION OR COMMON EXCAVATION. THE ALLOWANCE USED FOR EXPANDING THE FILLS TO COMPUTE THE VOLUME OF MATERIAL REQUIRED IS 1.3

THE CITY OF PORTAGE WILL PROVIDE AND INSTALL COVERS FOR THE LIGHT BASES.

REMOVE EXISTING TIMBER CRIBBING REVETMENT WALL AS NECESSARY TO CONSTRUCT NEW REVETMENT WALLS. (INCIDENTIAL TO COMMON EXCAVATION)

THE CANAL IS A WETLAND. THE CONTRACTOR IS GRANTED ACCESS TO THE CANAL FOR CONSTRUCTION PURPOSES.

UTILITIES

ALLIANT ENERGY
ATTN: TROY SCHNEIDER
4902 N. BILTMORE LANE
MADISON, WI 53718
(608) 458-5739

CHARTER COMMUNICATIONS
ATTN: GARY ANDERSON
5618 ODANA ROAD
MADISON, WI 53719
(608) 274-3822 x6894

VERIZON TELEPHONE
ATTN: STEVE ACKERSON
100 COMMUNICATIONS DRIVE
SUN PRAIRIE, WI 53590
(608) 837-1405

DNR LIAISON

MR. STEVE ALES (608) 275-3310
MR. RON GRASSHOFF (608) 275-3481
DEPARTMENT OF NATURAL RESOURCES
SOUTH CENTRAL DISTRICT
3911 SOUTH FISH HATCHERY ROAD
FITCHBURG, WI 53711

STORM SEWER CONTACT

MR. RON STEINER, P.E.
GENERAL ENGINEERING COMPANY
916 SILVER LAKE DRIVE
P.O. BOX 340
PORTAGE, WI 53901
(608) 742-2169

DESIGNER CONTACT

MEAD & HUNT — ENGINEERS ARCHITECTS SCIENTISTS PLANNERS

6501 WATTS ROAD
MADISON, WI. 53719

RUSTY CHESMORE, P.E.
TELEPHONE: (608) 273-6380

DIGGERS HOTLINE

Toll Free (800) 242-8511
Milwaukee Area (414) 259-1181
Hearing Impaired TDD (800) 542-2289
www.DiggersHotline.com

STANDARD ABBREVIATIONS

ADT	AVERAGE DAILY TRAFFIC	MH	MANHOLE
AGG	AGGREGATE	PI	POINT OF INTERSECTION
AH	AHEAD	PL	PROPERTY LINE
BK	BACK	POT	POINT ON TANGENT
BLDG	BUILDING	PP	POWER POLE
BM	BENCH MARK	PT	POINT OF TANGENCY
C&G	CURB & GUTTER	R	RADIUS OR RANGE
CMCP	CORRUGATED METAL CULVERT PIPE	RCCP	REINFORCED CONCRETE CULVERT PIPE
CONC	CONCRETE	RDWY	ROADWAY
CONST	CONSTRUCTION	REQD	REQUIRED
COR	CORNER	RHF	RIGHT HAND FORWARD
CY	CUBIC YARD	RL	REFERENCE LINE
D	DEGREE OF CURVE	RO	RUNOFF
DHV	DESIGN HOURLY VOLUME	RT	RIGHT
DIA	DIAMETER	ROW	RIGHT-OF-WAY
DWY	DRIVEWAY	SAN	SANITARY SEWER
EBS	EXCAVATION BELOW SUBGRADE	SDW	SIDEWALK
EL	ELEVATION	SE	SUPERELEVATION
ELEC	ELECTRIC	SEC	SECTION
ENTR	ENTRANCE	SHLD	SHOULDER
EXIST	EXISTING	SS	STORM SEWER
FL	FLOW LINE	SSD	STOPPING SIGHT DISTANCE
FT	FEET (FOOT)	STA	STATION
HOR	HORIZONTAL	SY	SQUARE YARD
IN	INCHES	T	TANGENT OR TRUCKS
INL	INLET	TEL	TELEPHONE
L	LENGTH OF CURVE	TL	TRANSIT LINE
LF	LINEAR FEET	TN	TOWN
LT	LEFT	TYP	TYPICAL
MAX	MAXIMUM	UG	UNDERGROUND
MIN	MINIMUM	UNCL	UNCLASSIFIED
NOR	NORMAL	VAR	VARIABLE
PAVT	PAVEMENT	VC	VERTICLE CURVE
PC	POINT OF CURVATURE	VERT	VERTICAL
LC	LONG CHORD	W	WATER
LCB	LONG CHORD BEARING	RCPSS	"REINFORCED CONCRETE PIPE, STORM SEWER"
CL	CENTER LINE	USGS	UNITED STATES GEOLOGICAL SURVEY

STANDARD DETAIL DRAWINGS

8A5-16b	INLET COVERS TYPE B, B-A, C, MS, MS-A, & WM
8B7-3	MANHOLES TYPE 2 & 3
8C5-2	INLETS TYPE 8, 9, 10, AND 11
8E9-5	SILT FENCE
8E11-2	TURBIDITY BARRIER
8F4-5	JOINT TIES FOR CONCRETE PIPE
9B2-7	CONDUIT
9C7-2	CONCRETE BASE, TYPE 6
15C12-2	TRAFFIC CONTROL FOR LANE CLOSURE (SUITABLE FOR MOVING OPERATIONS)
15D28-1	TRAFFIC CONTROL, WORK ON SHOULDER OR PARKING LANE, UNDIVIDED ROADWAY
15D29-1	TRAFFIC CONTROL, VEHICLE ENTRANCE/EXIT OR HAUL ROAD
15D30-1	TRAFFIC CONTROL, SIDEWALK CLOSURE

2

2

N

APPROX

APPROX

LOCK STREET

USH 51 (WISCONSIN ST.)

DEWITT ST.

ADAMS STREET

EDGEWATER ST.

EDGEWATER ST.

END 'A' LINE
STA 11'A'+13.58

BEGIN CONSTRUCTION
STA 5'C'+15.95
Y = 393,476.436
X = 536,778.941

BEGIN CONSTRUCTION 'D' LINE
STA 18'D'+68.29
Y=393,857.704
X=538,038.022

END CONSTRUCTION 'D' LINE
STA 25'D'+00.00

6'C'+00
5+00
BEGIN PROJECT
STA 5+00.00
Y = 393,406.594
X = 536,758.064
11'A'+00
7'B'+00
10'C'+00
10'B'+00
15'C'+00
15+00
15'B'+00
20'D'+00
20+00
20'E'+00

END PROJECT
STA 25+00

END CONSTRUCTION 'E' LINE
STA 25'E'+00.00

BEGIN CONSTRUCTION 'B' LINE
STA 6'B'+14.68
Y=393,404.772
X=536,877.383

END CONSTRUCTION 'B' LINE
16'C'+99.54=
16'B'+78.95

W. MULLETT ST.

E. MULLETT ST.

BEGIN CONSTRUCTION
STA 10'A'+00
Y = 393,301.559
X = 536,899.468

END CONSTRUCTION 'C' LINE
STA 17'C'+34.28

WARREN ST

WISCONSIN RIVER

BEGIN CONSTRUCTION 'E' LINE
STA 18'E'+42.46
MATCH EXISTING
Y=393,784.700
X=538,056.360

STORAGE

USH 51 (WISCONSIN ST.)

PROJECT NO: 6996-05-07	HWY: PORTAGE CANAL	COUNTY: COLUMBIA	PROJECT OVERVIEW	SHEET	E

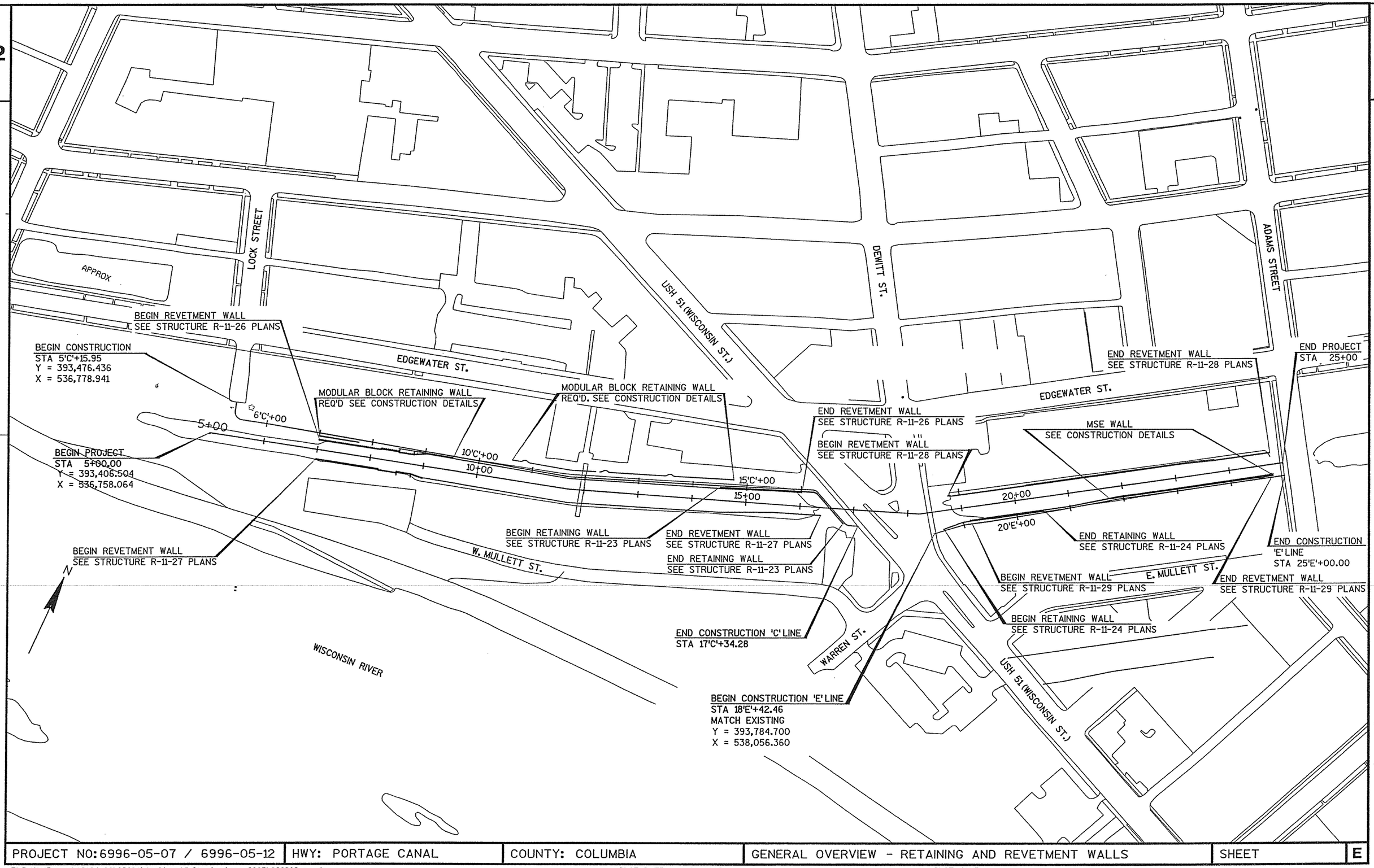

PROJECT NO: 6996-05-07 / 6996-05-12	HWY: PORTAGE CANAL	COUNTY: COLUMBIA	GENERAL OVERVIEW - RETAINING AND REVETMENT WALLS	SHEET	E

FILE NAME : x:\16194-00\02001\tech\cadd\final plans 2005\020202_po.dgn PLOT DATE : 10/21/2005 PLOT BY : Madison PLOT NAME : PLOT SCALE : 150.000 ' / IN.

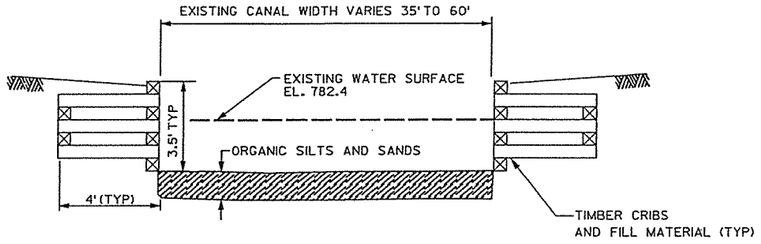

TYPICAL EXISTING CANAL SECTION

(LOOKING EAST)

WISCONSIN RIVER LOCK TO ADAMS STREET
STA 9+00 TO STA 25+00

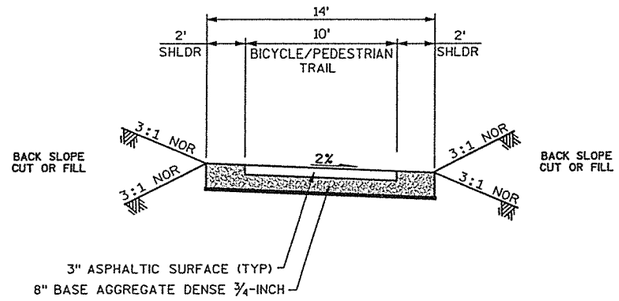

TYPICAL PROPOSED BICYCLE/PEDESTRIAN TRAIL SECTION

STA. 5'C'+15.95 TO STA. 7'C'+00
STA. 10'A'+00 TO STA. 11'A'+13.58

2

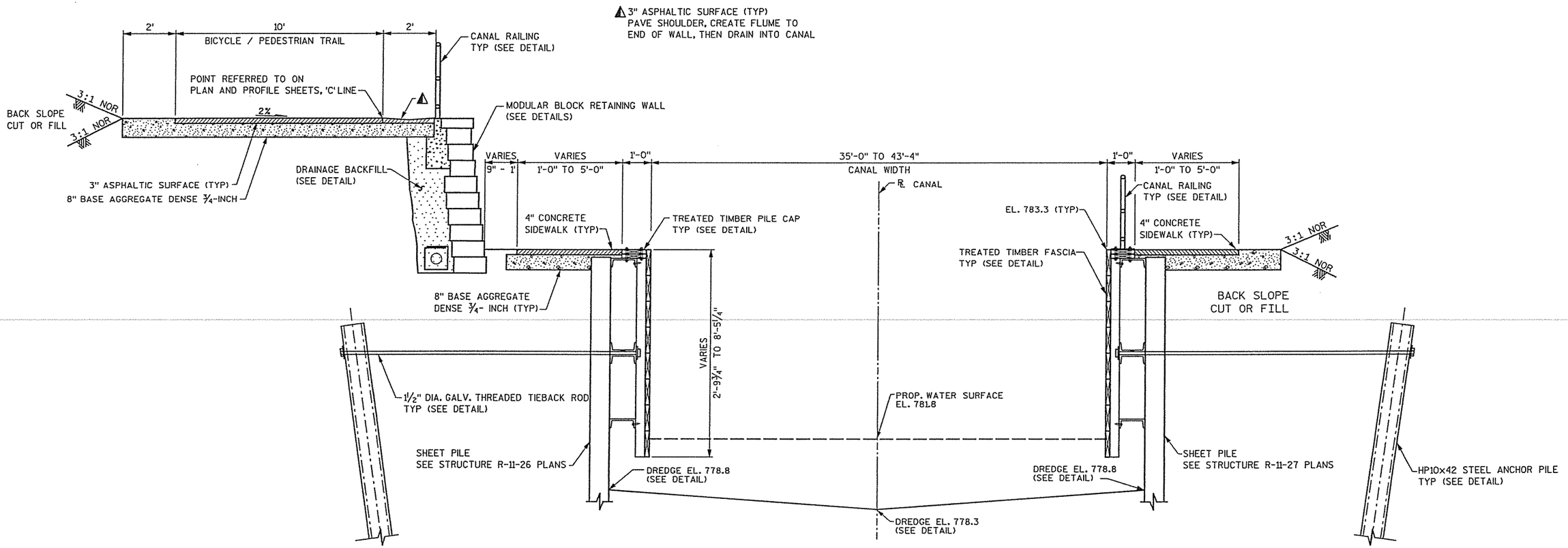

TYPICAL PROPOSED CANAL SECTION

(LOOKING EAST)
WISCONSIN RIVER LOCK TO WISCONSIN STREET
STA. 7+00.00 TO STA. 7+75
STA. 8+50.00 TO STA. 9+50
(ANCHORED SHEET PILE REVETMENT WALL)

2

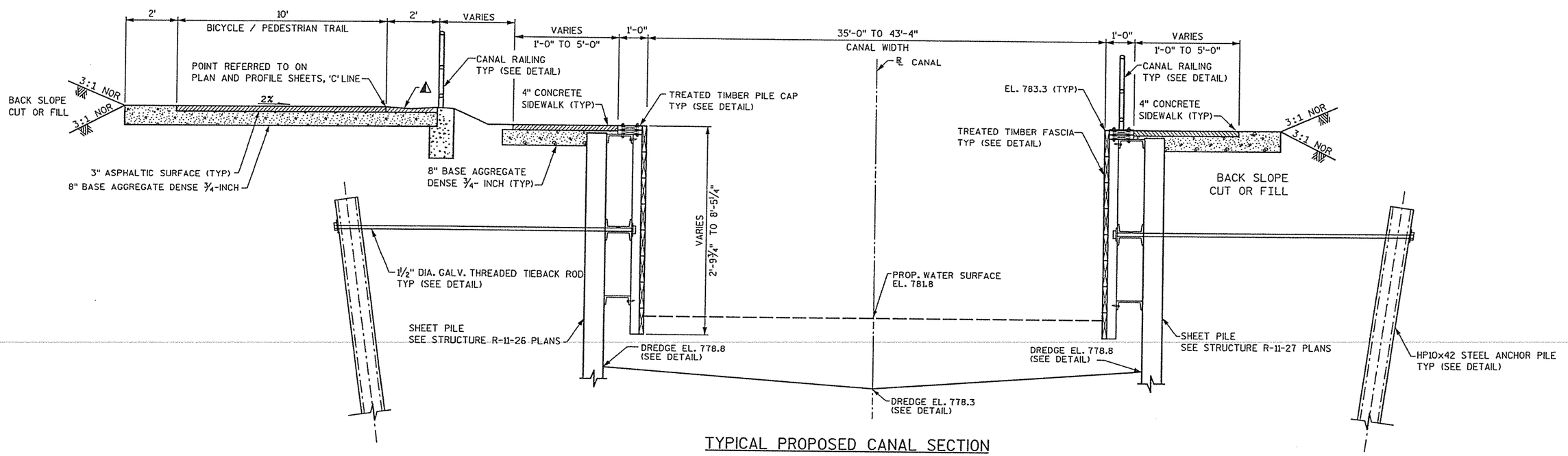

TYPICAL PROPOSED CANAL SECTION

(LOOKING EAST)
WISCONSIN RIVER LOCK TO WISCONSIN STREET
STA. 7+75.00 TO STA. 8+50.00
(ANCHORED SHEET PILE REVETMENT WALL)

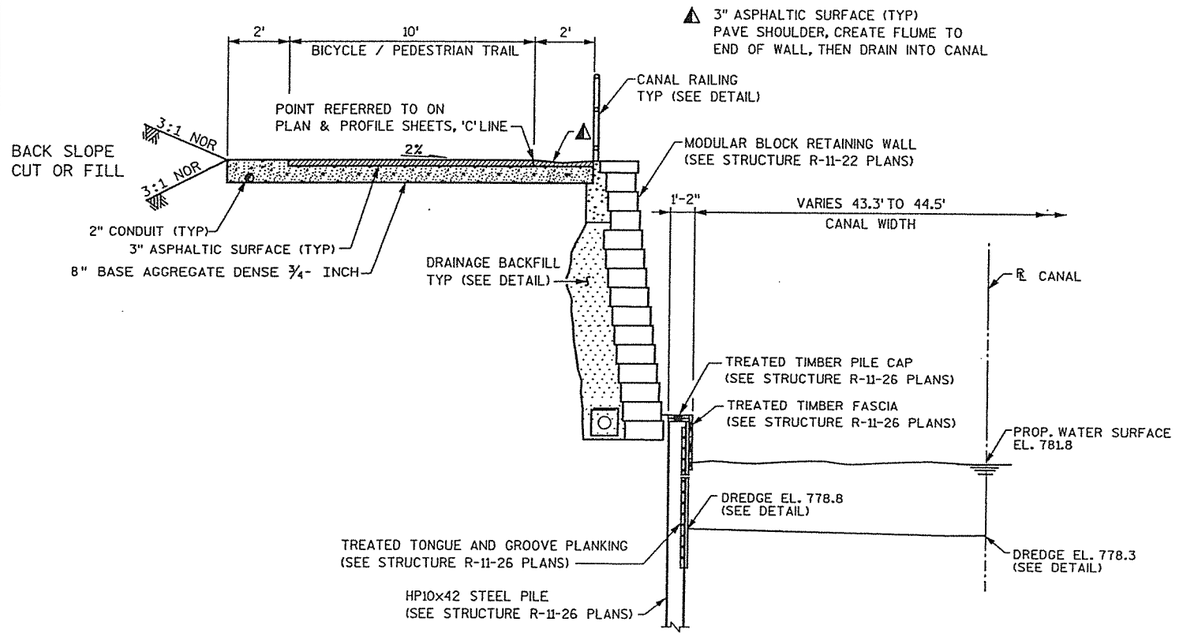

TYPICAL PROPOSED CANAL SECTION

(LOOKING EAST)

WISCONSIN RIVER LOCK TO WISCONSIN STREET
STA 9'C'+03 TO STA 9'C'+50
(CANTILEVERED SOLDIER PILE REVETMENT WALL)

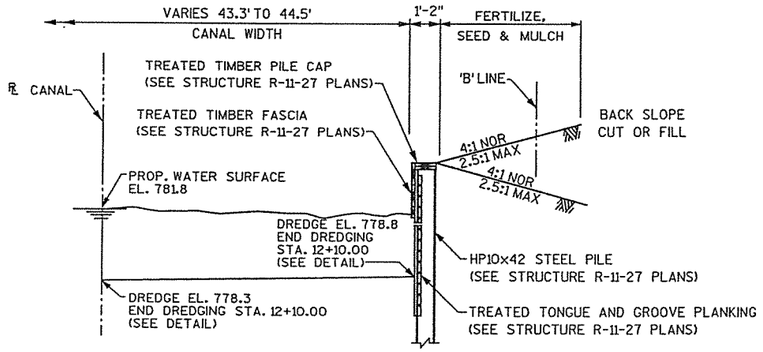

TYPICAL PROPOSED CANAL SECTION

(LOOKING EAST)

WISCONSIN RIVER LOCK TO WISCONSIN STREET
STA 9'B'+03 TO STA 15'B'+25
(CANTILEVERED SOLDIER PILE REVETMENT WALL)

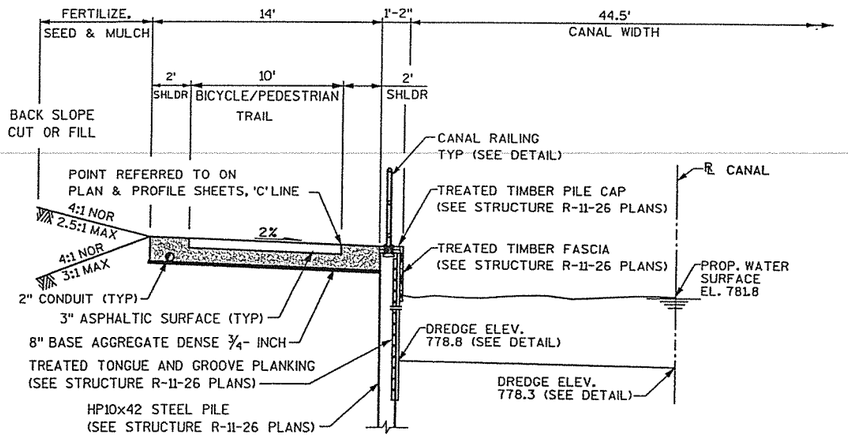

TYPICAL PROPOSED CANAL SECTION

(LOOKING EAST)

WISCONSIN RIVER LOCK TO WISCONSIN STREET
STA 9'C'+50 TO STA 10'C'+60
(CANTILEVERED SOLDIER PILE REVETMENT WALL)

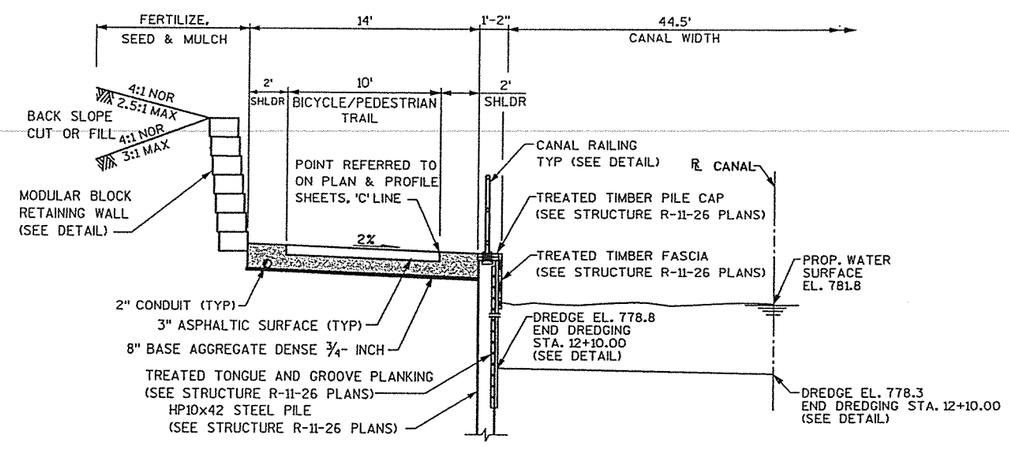

TYPICAL PROPOSED CANAL SECTION

(LOOKING EAST)

WISCONSIN RIVER LOCK TO WISCONSIN STREET
STA 10'C'+60 TO STA 14'C'+53
(CANTILEVERED SOLDIER PILE REVETMENT WALL)

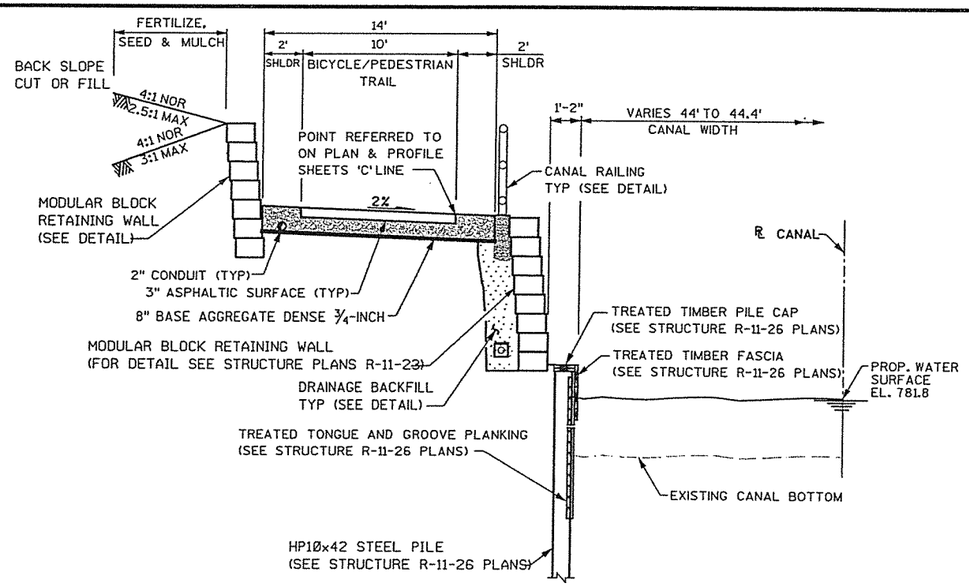

TYPICAL PROPOSED CANAL SECTION

(LOOKING EAST)
WISCONSIN RIVER LOCK TO WISCONSIN STREET
STA 14'C'+53 TO STA 14'C'+75
(CANTILEVERED SOLDIER PILE REVETMENT WALL)

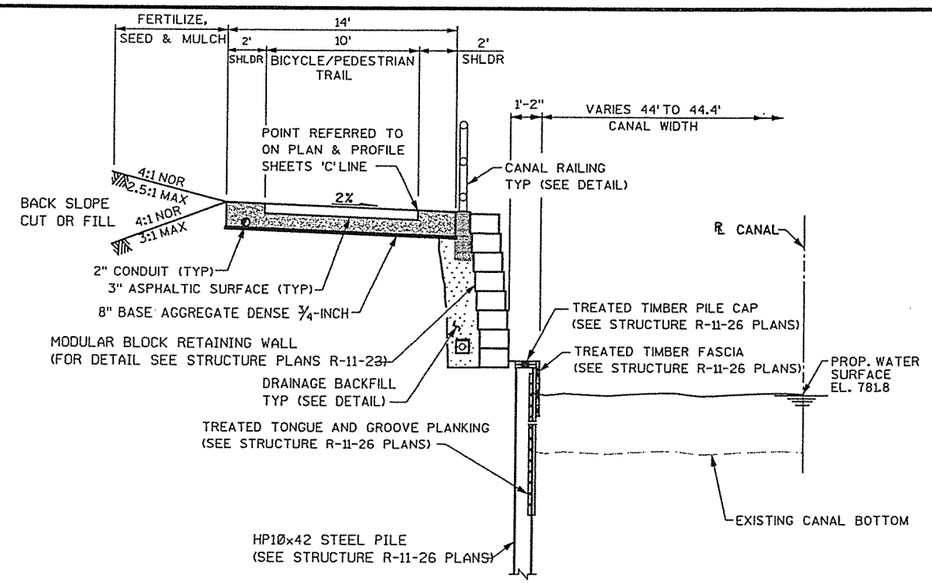

TYPICAL PROPOSED CANAL SECTION

(LOOKING EAST)
WISCONSIN RIVER LOCK TO WISCONSIN STREET
STA 14'C'+75 TO STA 15'C'+00
(CANTILEVERED SOLDIER PILE REVETMENT WALL)

2

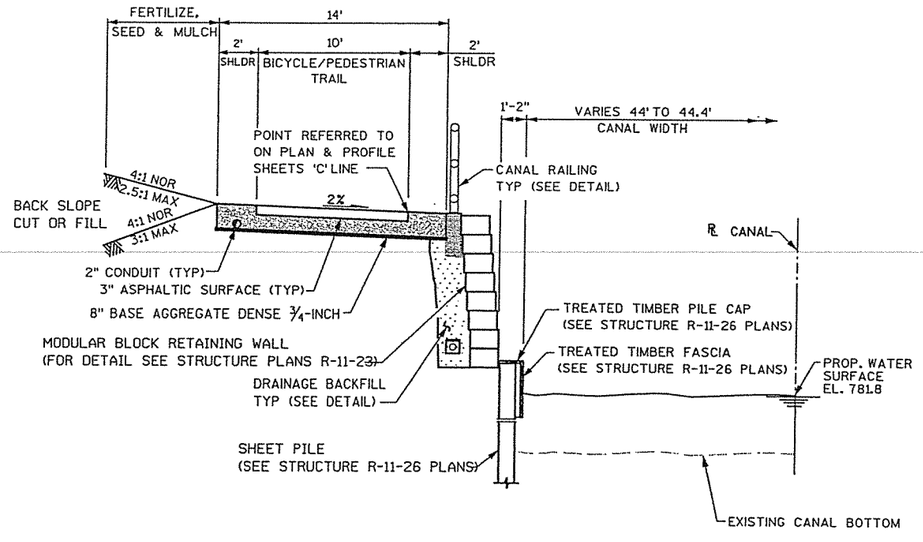

TYPICAL PROPOSED CANAL SECTION

(LOOKING EAST)
WISCONSIN RIVER LOCK TO WISCONSIN STREET
STA 15'C'+00 TO STA 16'C'+01
(CANTILEVERED SHEET PILE REVETMENT WALL)

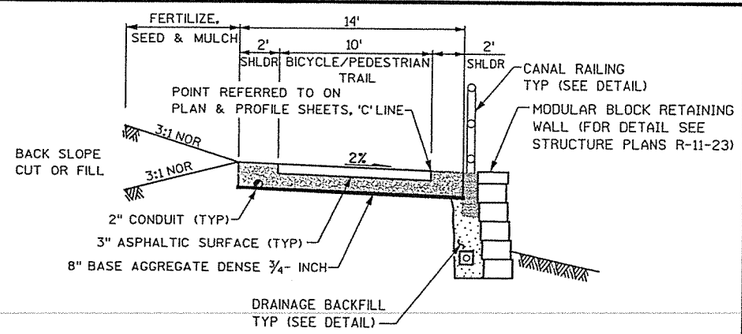

TYPICAL PROPOSED BICYCLE/PEDESTRIAN TRAIL SECTION

(ADJACENT TO WISCONSIN STREET)
STA 16'C'+00.00 TO STA 17'C'+07.21

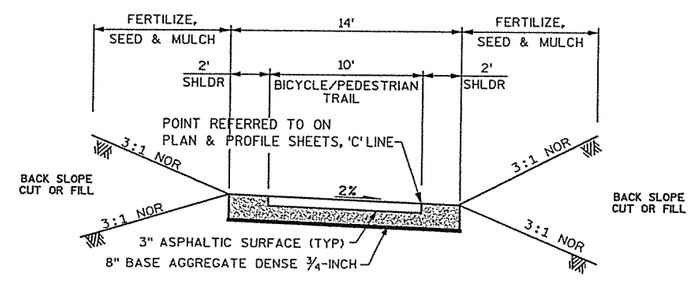

TYPICAL PROPOSED BICYCLE/PEDESTRIAN TRAIL SECTION

STA 17'C'+07.21 TO STA 17'C'+34.28

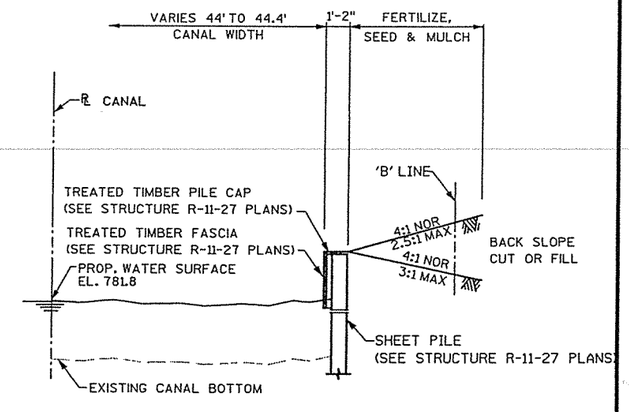

TYPICAL PROPOSED CANAL SECTION

(LOOKING EAST)
WISCONSIN RIVER LOCK TO WISCONSIN STREET
STA 15'B'+25 TO STA 16'B'+39
(CANTILEVERED SHEET PILE REVETMENT WALL)

PROJECT NO: 6996-05-07	HWY: PORTAGE CANAL	COUNTY: COLUMBIA	TYPICAL SECTIONS	SHEET	E

FILE NAME : x:\16194-00\02001\tech\cadd\final plans 2005\020301d_ts.dgn

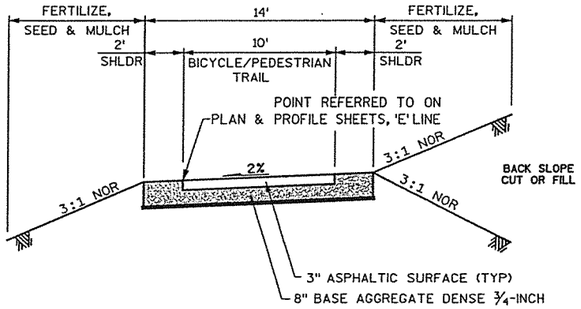

TYPICAL PROPOSED BICYCLE/PEDESTRIAN TRAIL SECTION

STA 18'E'+42.46 TO STA 18'E'+61.60

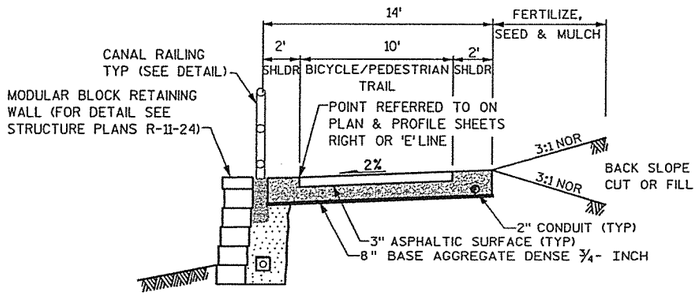

TYPICAL PROPOSED BICYCLE/PEDESTRIAN TRAIL SECTION

STA 18'E'+61.60 TO STA 19'E'+21.5

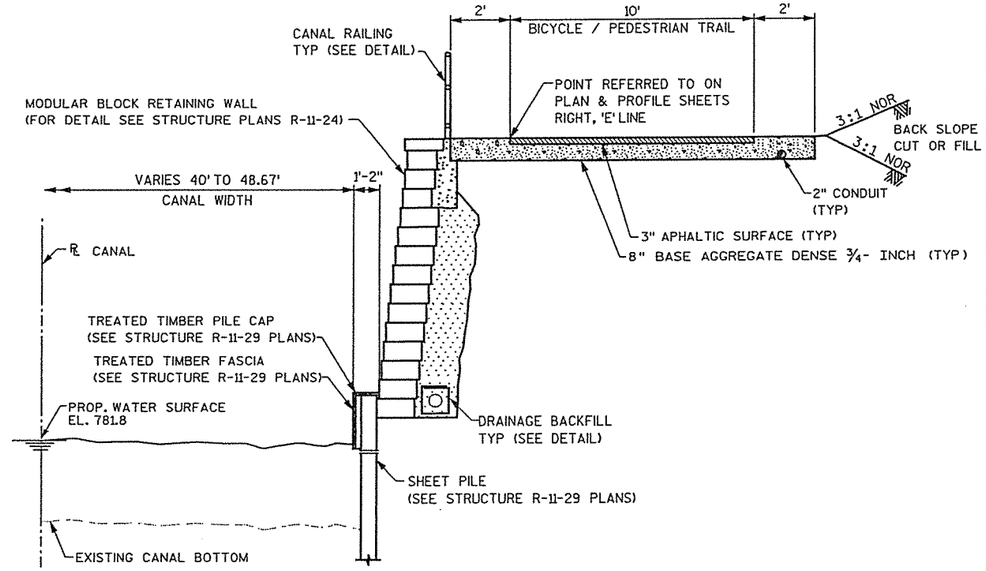

TYPICAL PROPOSED CANAL SECTION

(LOOKING EAST)

WISCONSIN STREET TO ADAMS STREET
STA 19'E'+12 TO STA 20'E'+50
STA 21'E'+77.50 TO STA 24'E'+79
(CANTILEVERED SHEET PILE REVETMENT WALL)

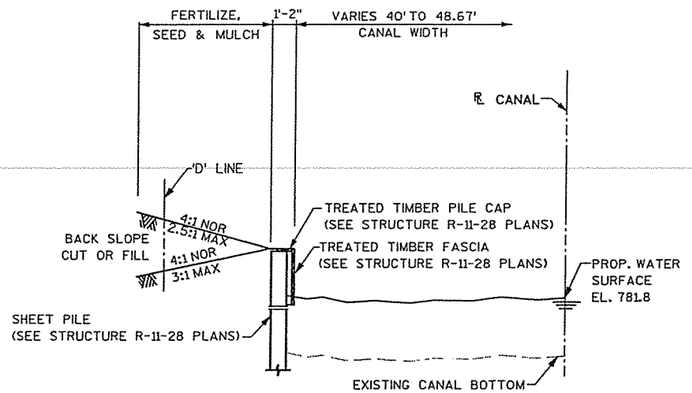

TYPICAL PROPOSED CANAL SECTION

(LOOKING EAST)

WISCONSIN STREET TO ADAMS STREET
STA 18'D'+79.00 TO STA 20'D'+25.00
STA 23'D'+75.00TO STA 24'D'+80.00
(CANTILEVERED SHEET PILE REVETMENT WALL)

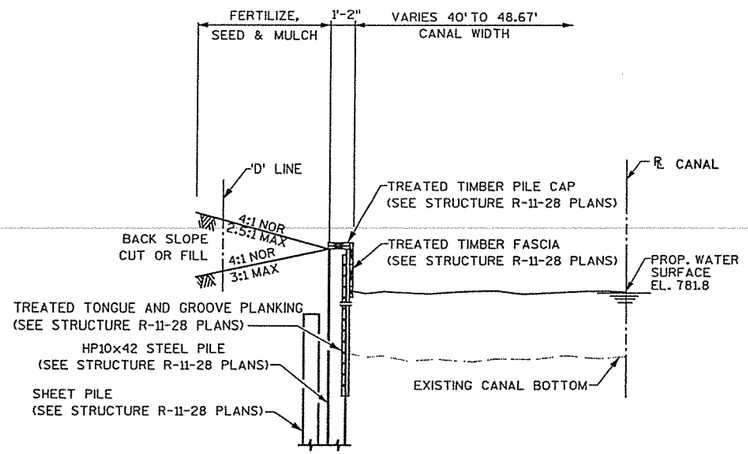

TYPICAL PROPOSED CANAL SECTION

(LOOKING EAST)

WISCONSIN STREET TO ADAMS STREET
STA 20'D'+25.00 TO STA 23'D'+75.00
(CANTILEVERED SOLDIER PILE REVETMENT WALL)

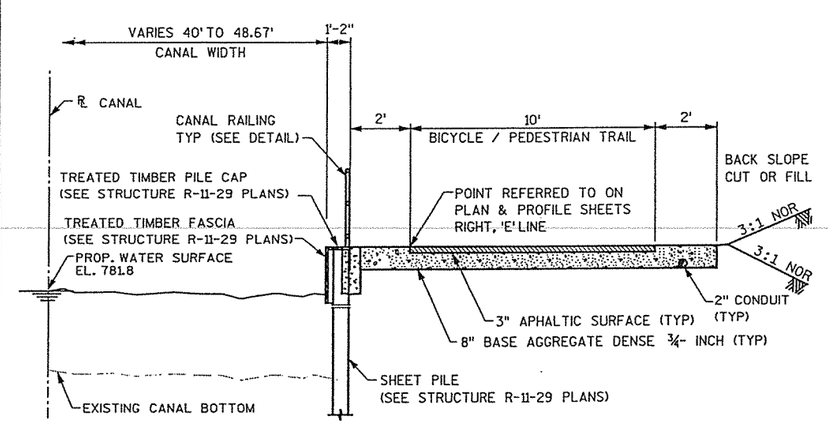

TYPICAL PROPOSED CANAL SECTION

(LOOKING EAST)

WISCONSIN STREET TO ADAMS STREET
STA 20'E'+50.00 TO STA 21'E'+77.5
(CANTILEVERED SHEET PILE REVETMENT WALL)

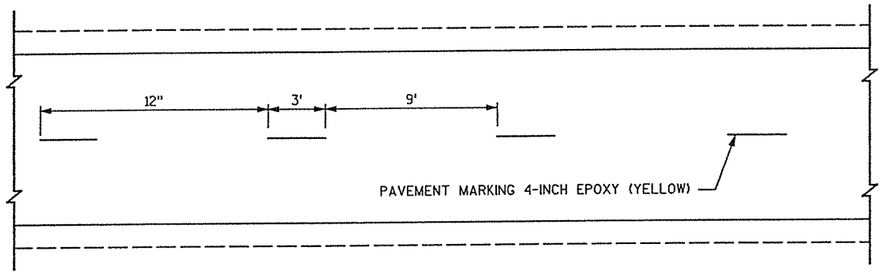

BIKE TRAIL PAVEMENT MARKING

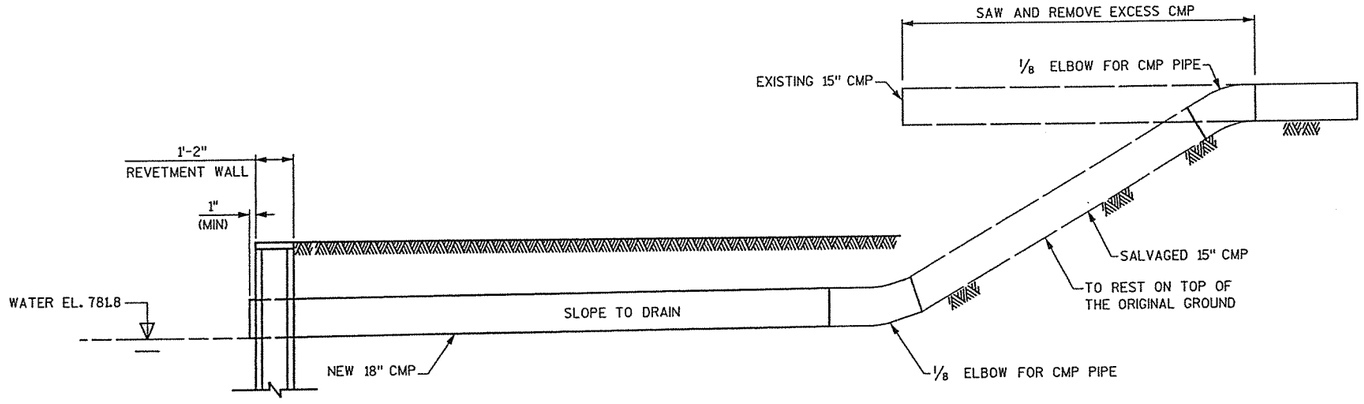

SALVAGED 15" CMP

STA 20'D'+51.00

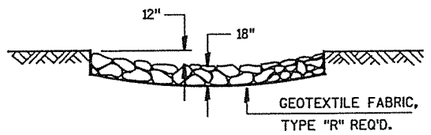

SECTION A-A

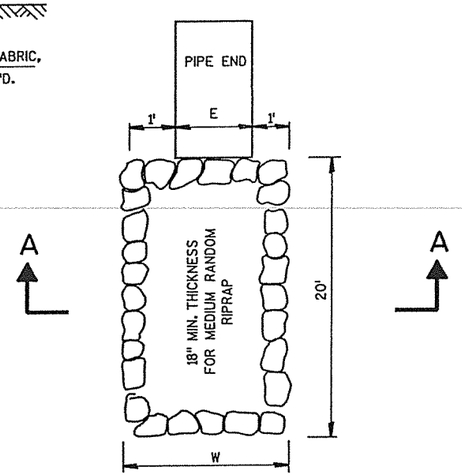

MEDIUM RANDOM RIPRAP TREATMENT AT CULVERTS

STA 8'C'+90, LT.

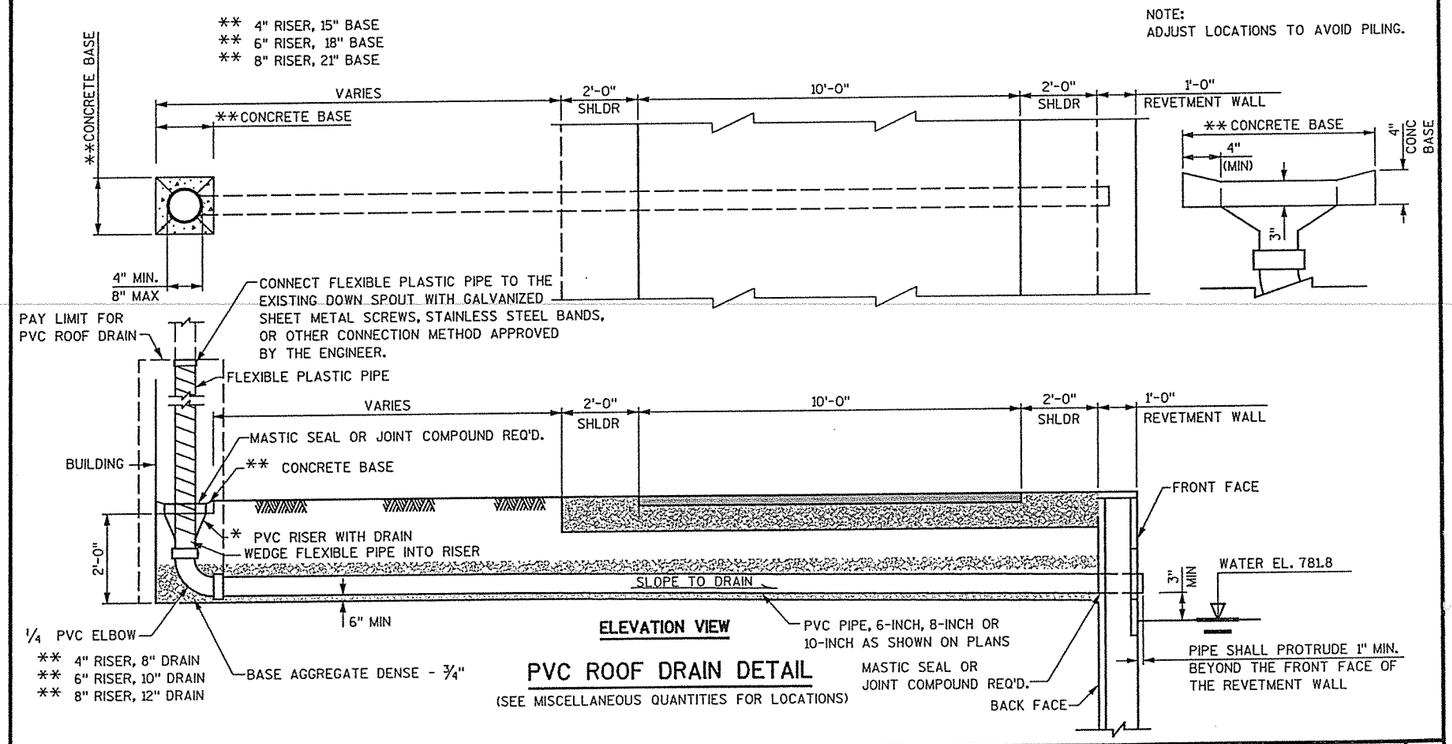

PVC ROOF DRAIN DETAIL

(SEE MISCELLANEOUS QUANTITIES FOR LOCATIONS)

PROJECT NO: 6996-05-07	HWY: PORTAGE CANAL	COUNTY: COLUMBIA	CONSTRUCTION DETAILS	SHEET E

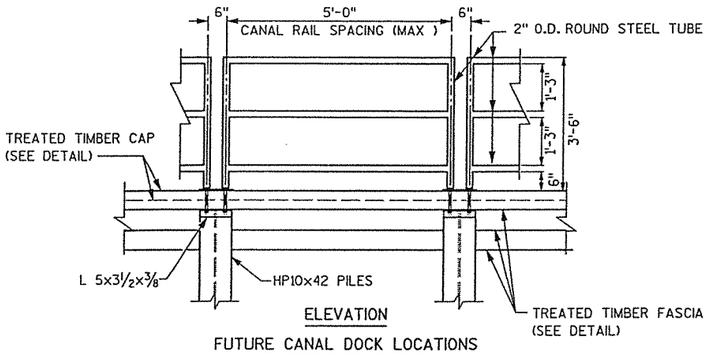

ELEVATION

FUTURE CANAL DOCK LOCATIONS

(APPROXIMATE FUTURE CANAL DOCK LOCATIONS)
STA. 9'C'+75.00, LT.
STA. 14'C'+40.00, LT.
STA. 21'E'+15, RT.

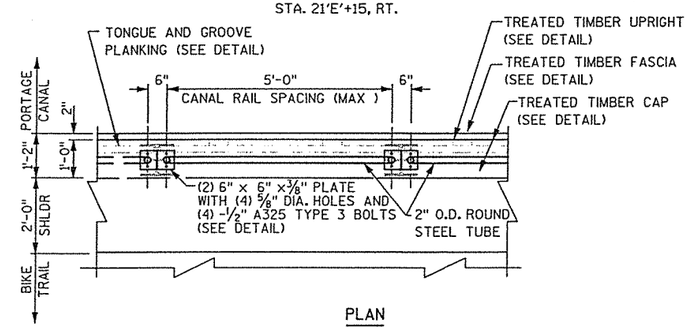

PLAN

FUTURE CANAL DOCK LOCATIONS

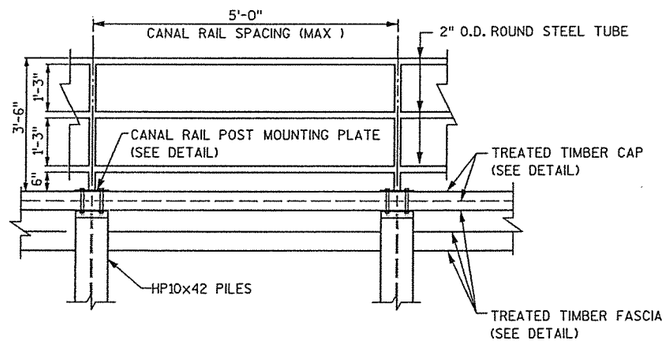

ELEVATION

CANTILEVERED SOLDIER PILE REVETMENT WALL

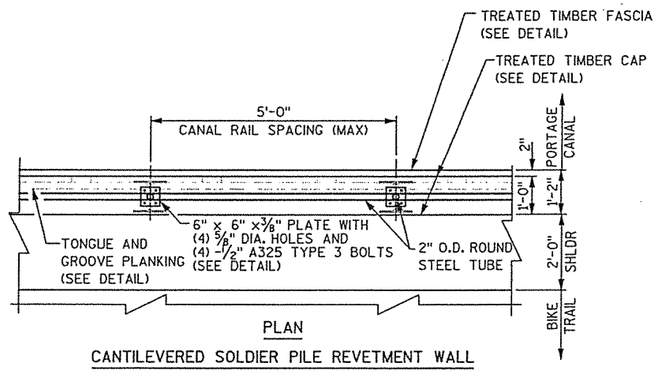

PLAN

CANTILEVERED SOLDIER PILE REVETMENT WALL

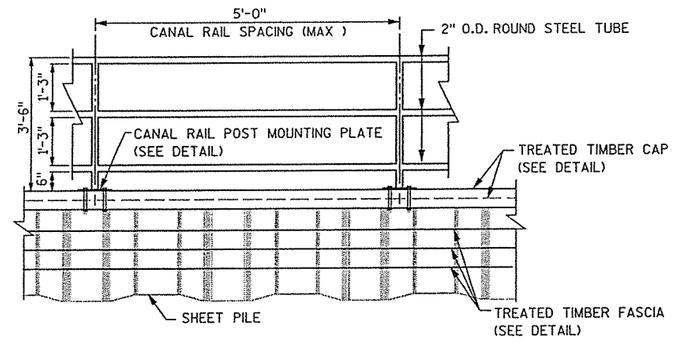

ELEVATION

CANTILEVERED SHEET PILE REVETMENT WALL

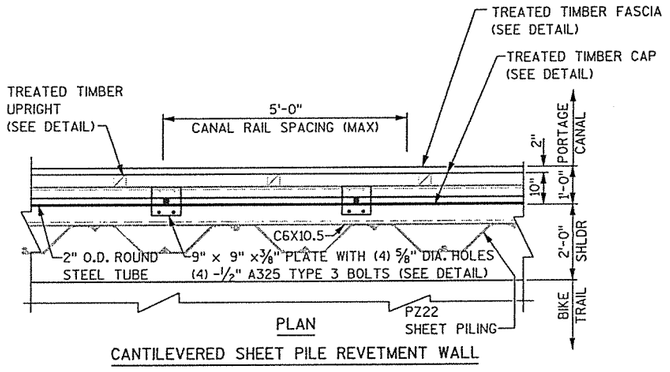

PLAN

CANTILEVERED SHEET PILE REVETMENT WALL

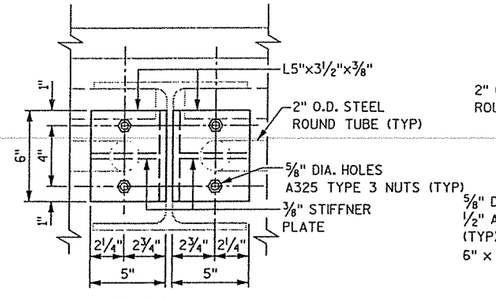

L6"x5"x3½"x⅜" PLATE DETAIL

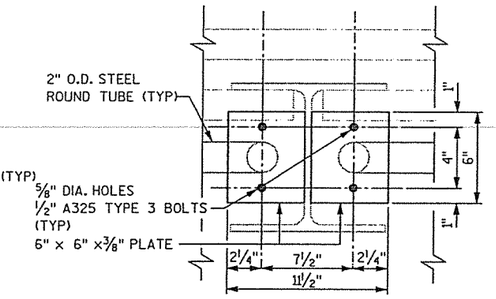

6"x6"x⅜" PLATE DETAIL

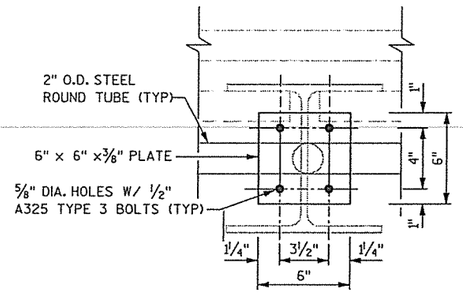

6"x6"x⅜" PLATE DETAIL

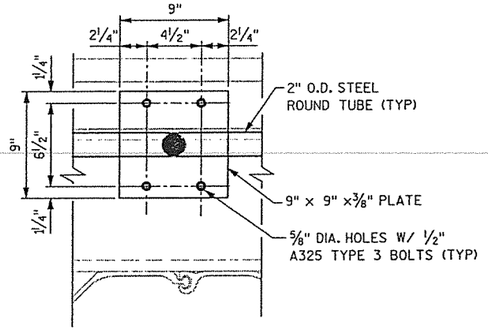

9"x9"x⅜" PLATE DETAIL

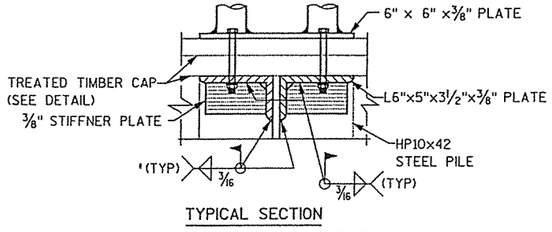

TYPICAL SECTION

NOTES:

GRADES VARY ON CANAL REVETMENT WALL AND TRAIL SHOULDER, FIELD VERIFY ALL ELEVATIONS AND TOP RAIL SLOPES PRIOR TO CANAL RAILING FABRICATION.

TOP RAIL OF CANAL RAILING SHALL BE PARALLEL WITH SURFACE GRADE AND PICKETS 90° VERTICAL. RAKE ACORDINGLY.

PROVIDE SHOP DRAWINGS.

CANAL RAILING SHALL BE PAINTED DARK BROWN

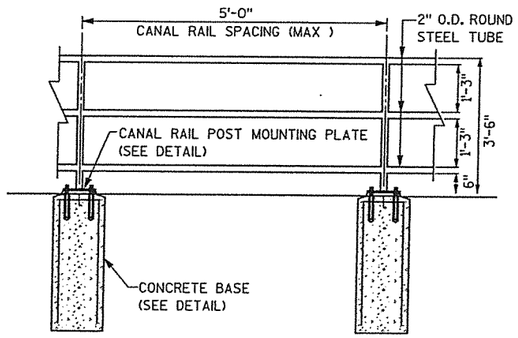

ELEVATION AT CONCRETE BASE

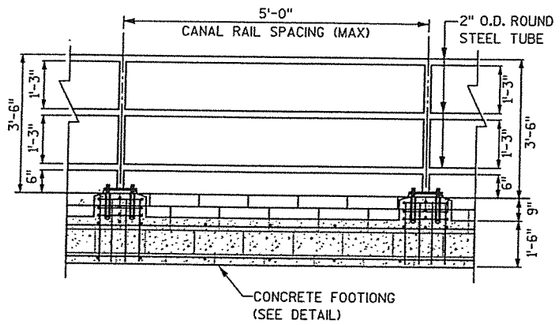

ELEVATION AT RETAINING WALL

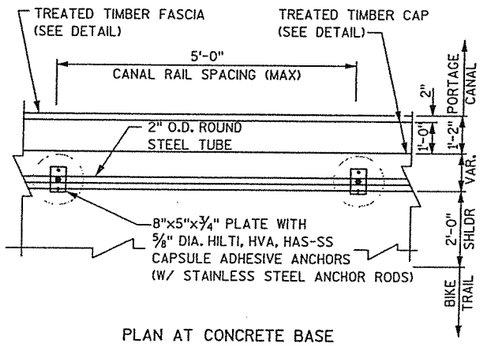

PLAN AT CONCRETE BASE

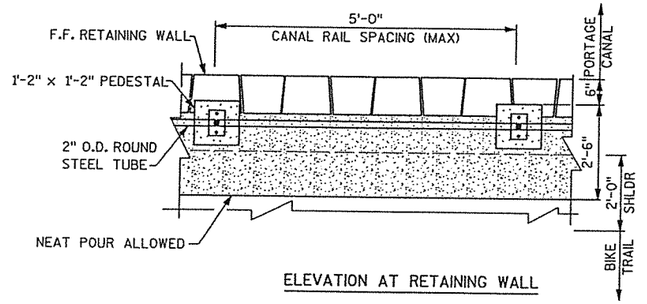

ELEVATION AT RETAINING WALL

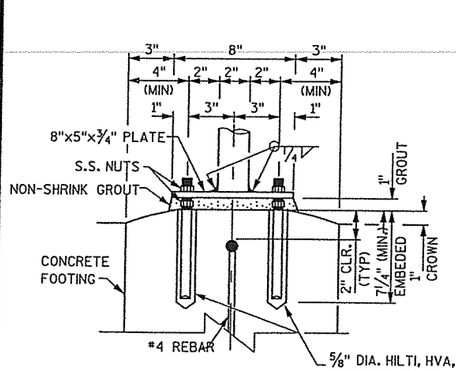

ELEVATION BASE DETAIL

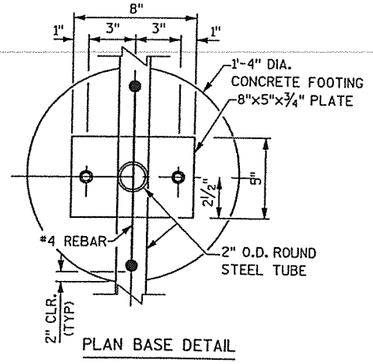

PLAN BASE DETAIL

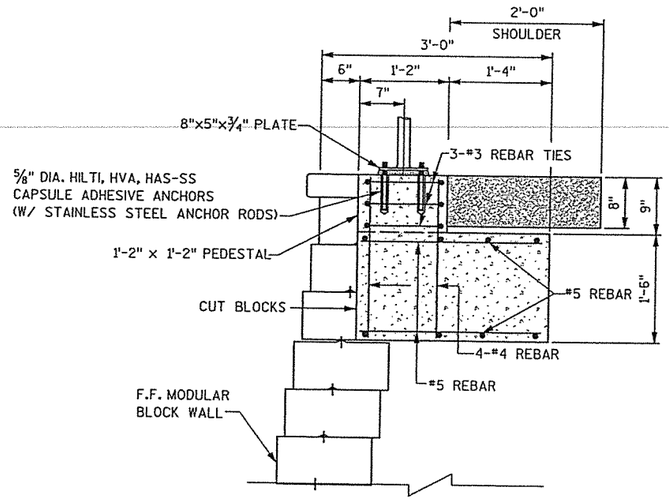

TYPICAL CROSS SECTION AT RETAINING WALL

NOTES:

GRADES VARY ON CANAL REVETMENT WALL AND TRAIL SHOULDER. FIELD VERIFY ALL ELEVATIONS AND TOP RAIL SLOPES PRIOR TO CANAL RAILING FABRICATION.

TOP RAIL OF CANAL RAILING SHALL BE PARALLEL WITH SURFACE GRADE AND PICKETS 90° VERTICAL. RAKE ACORDINGLY.

PROVIDE SHOP DRAWINGS.

CANAL RAILING SHALL BE PAINTED DARK BROWN

PROJECT NO: 6996-05-07	HWY: PORTAGE CANAL	COUNTY: COLUMBIA	CONSTRUCTION DETAILS CANAL RAILING	SHEET	E

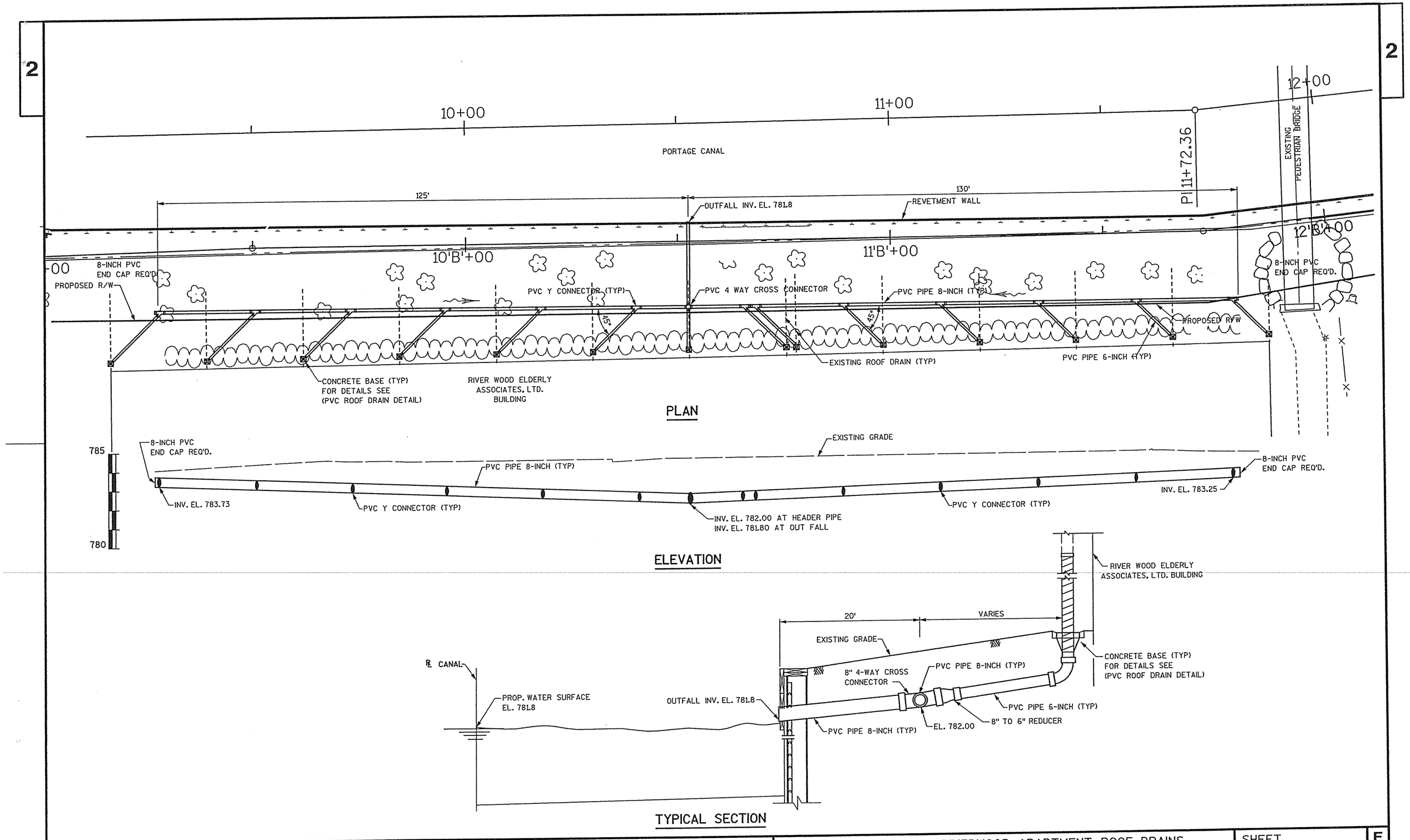

PROJECT NO: 6996-05-07	HWY: PORTAGE CANAL	COUNTY: COLUMBIA	CONSTRUCTION DETAILS, RIVERWOOD APARTMENT ROOF DRAINS	SHEET E

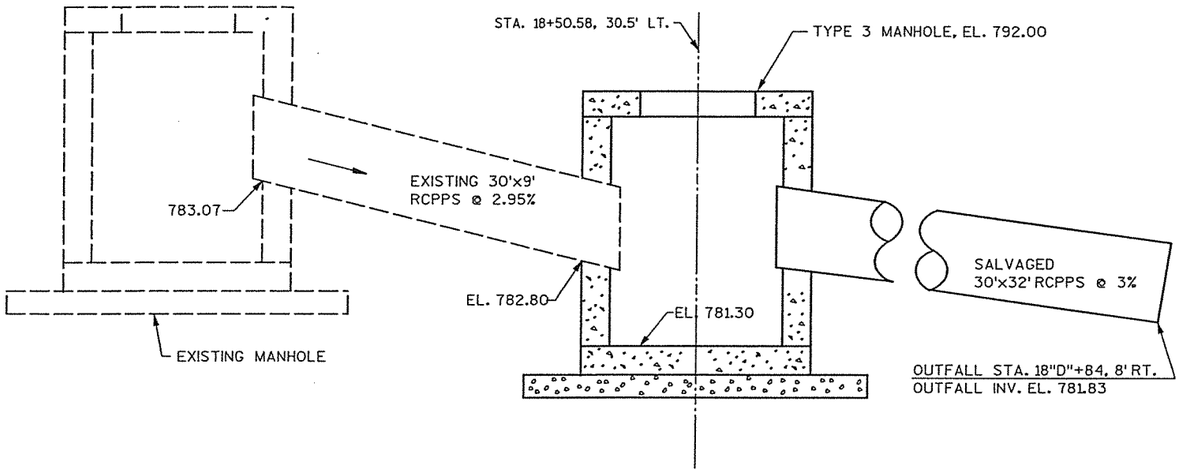

STORM SEWER DETAIL

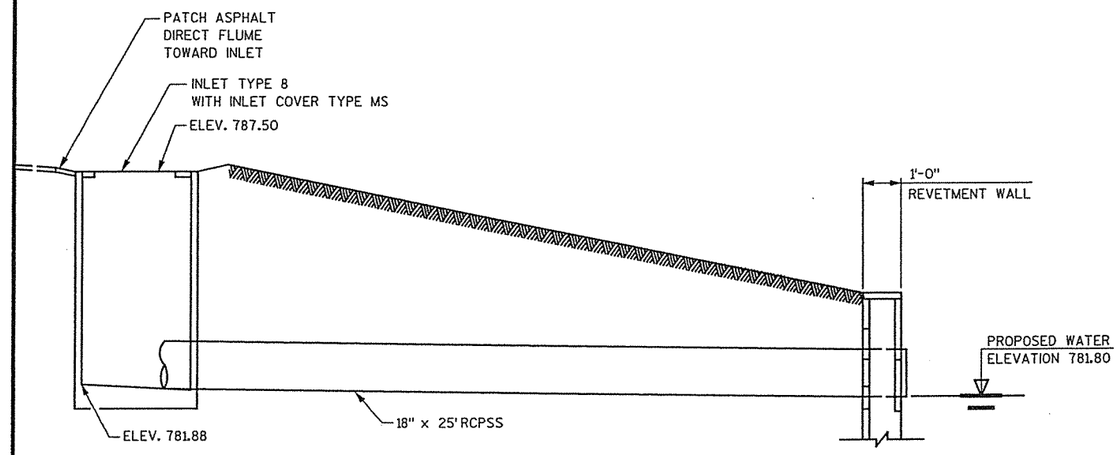

INLET DETAIL

STA 8+70, RT

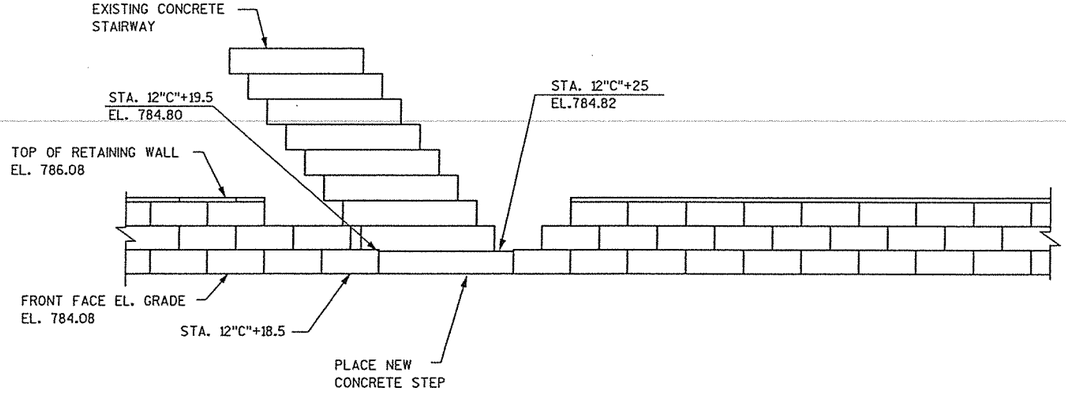

ELEVATION VIEW

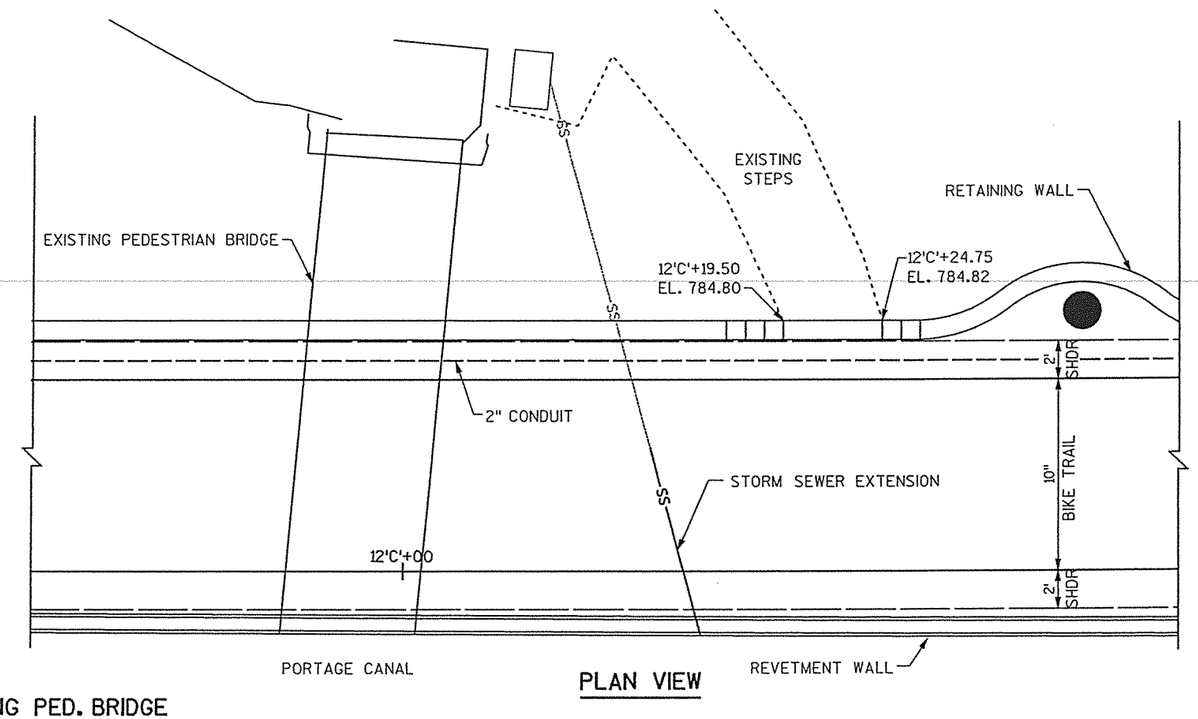

PLAN VIEW

STEPS NEXT TO EXISTING PED. BRIDGE

PROJECT NO: 6996-05-07	HWY: PORTAGE CANAL	COUNTY: COLUMBIA	CONSTRUCTION DETAILS	SHEET	E

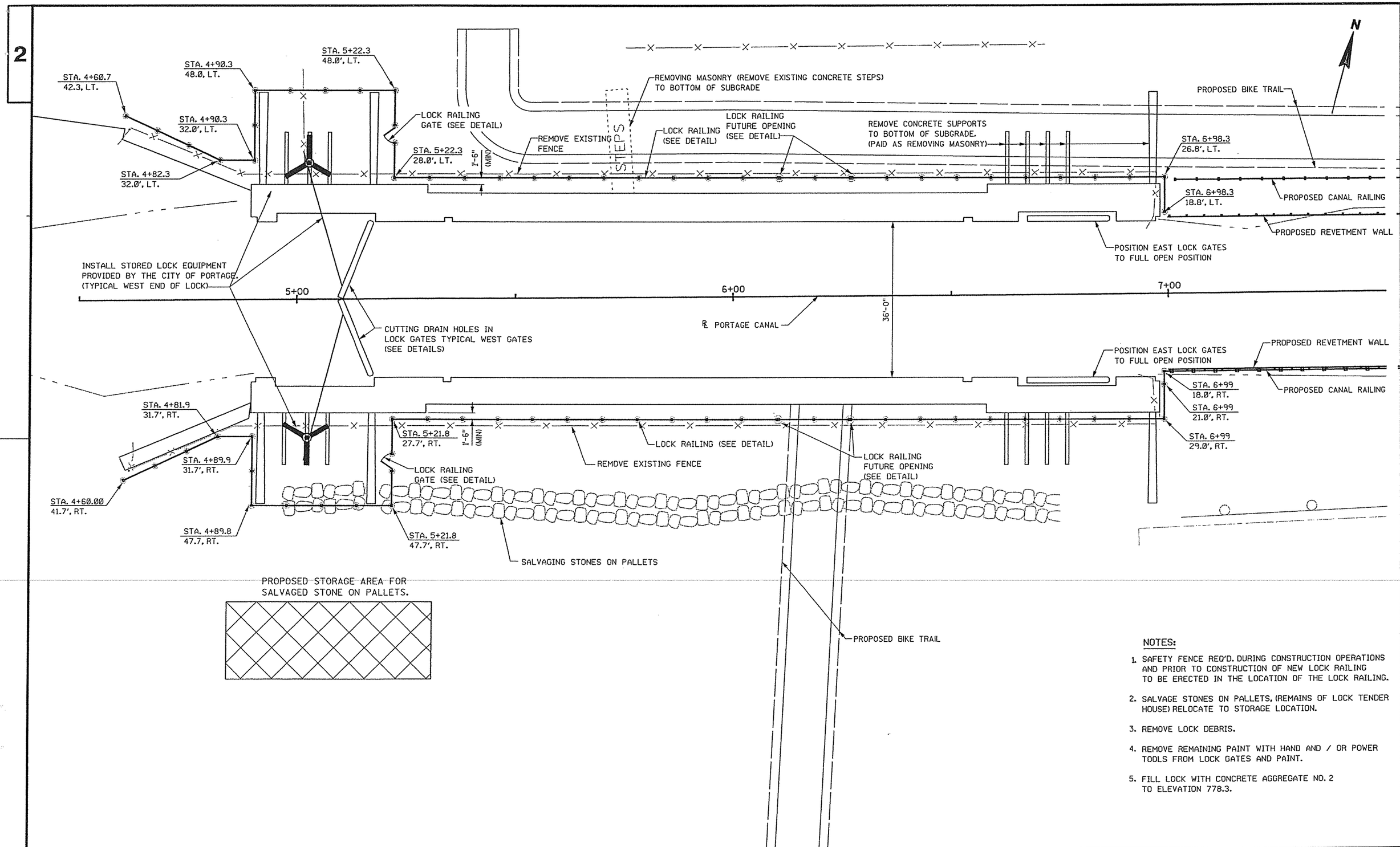

NOTES:

1. SAFETY FENCE REQ'D. DURING CONSTRUCTION OPERATIONS AND PRIOR TO CONSTRUCTION OF NEW LOCK RAILING TO BE ERECTED IN THE LOCATION OF THE LOCK RAILING.
2. SALVAGE STONES ON PALLETS, (REMAINS OF LOCK TENDER HOUSE) RELOCATE TO STORAGE LOCATION.
3. REMOVE LOCK DEBRIS.
4. REMOVE REMAINING PAINT WITH HAND AND / OR POWER TOOLS FROM LOCK GATES AND PAINT.
5. FILL LOCK WITH CONCRETE AGGREGATE NO. 2 TO ELEVATION 778.3.

PROJECT NO: 6996-05-12	HWY: PORTAGE CANAL	COUNTY: COLUMBIA	WISCONSIN RIVER LOCK DETAIL	SHEET	E

2

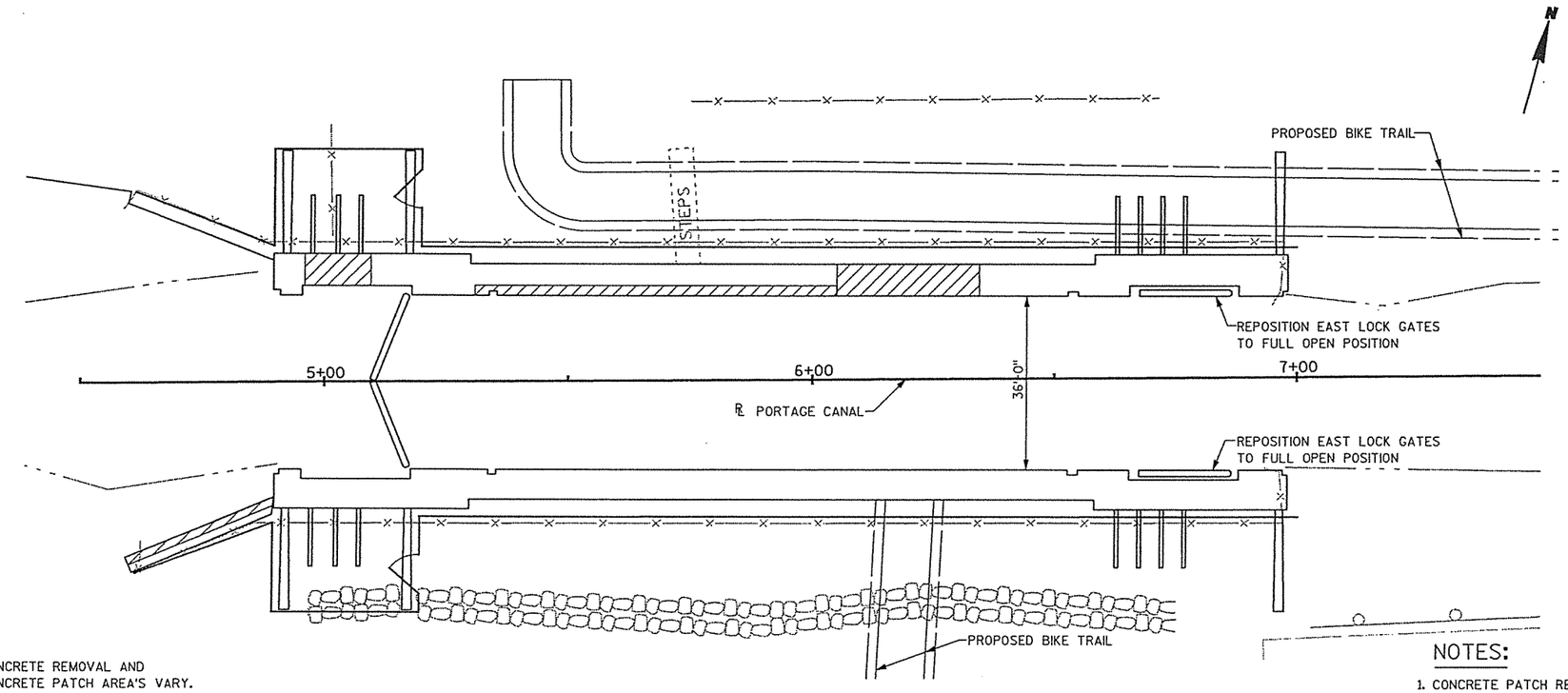

CONCRETE REMOVAL AND
CONCRETE PATCH AREA'S VARY.

PLAN

NOTES:

1. CONCRETE PATCH REPAIR AGGREGATE 1-1/2" MAX. APPLY "ACRYLIC 60" BONDING AGENT TO CONCRETE SURFACE PRIOR TO PLACING PATCH. REPLACE MIX WATER WITH "ACRYLIC 60".
2. AREAS OF ACTUAL CONCRETE SURFACE REPAIR TO BE DETERMINED DURING CONSTUCTION BY THE ENGINEER. ESTIMATED AREA OF CONCRETE SURFACE REPAIR = 1,800 SF. CONDITIONS MAY VARY. FIELD VERIFY

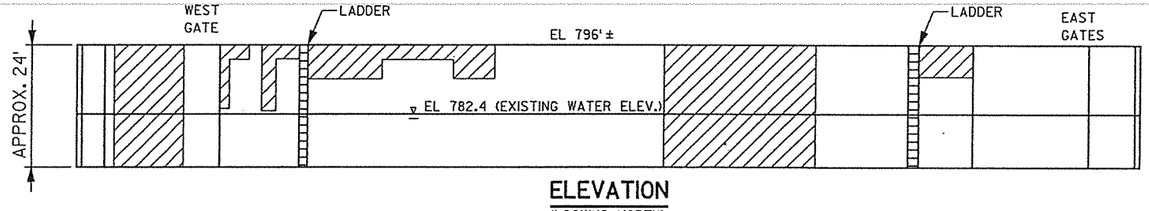

ELEVATION
(LOOKING NORTH)

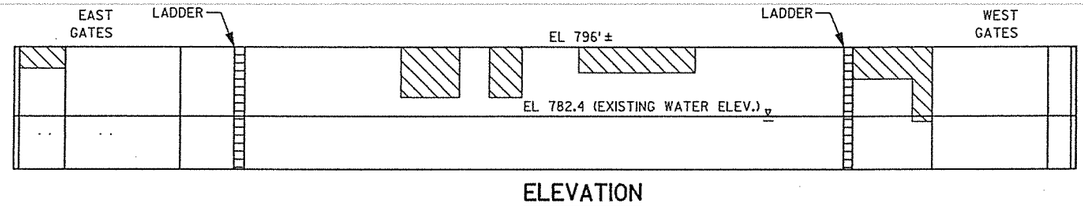

ELEVATION
(LOOKING SOUTH)

PROJECT NO: 6996-05-12	HWY: PORTAGE CANAL	COUNTY: COLUMBIA	WISCONSIN RIVER LOCK CONCRETE PATCHING DETAIL	SHEET	E

FILE NAME : x:\16194-00\02001\tech\cadd\final plans 2005\021007_cd.dgn PLOT DATE : 10/21/2005 PLOT BY : Madison PLOT NAME : PLOT SCALE : 30.000000 ' / IN. WISDOT/CADDS SHEET 43

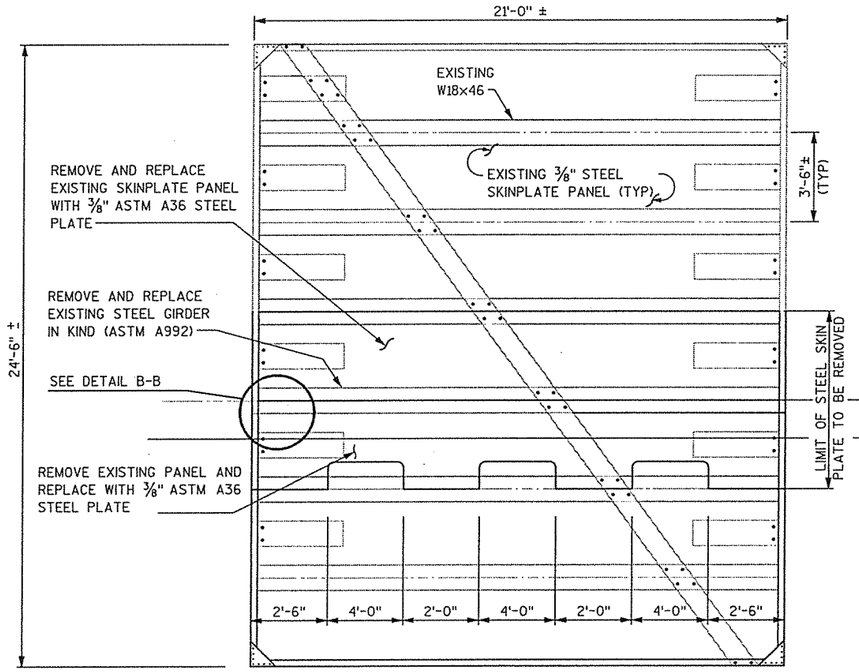

WEST LOCK GATE ELEVATION

(LOOKING EAST)

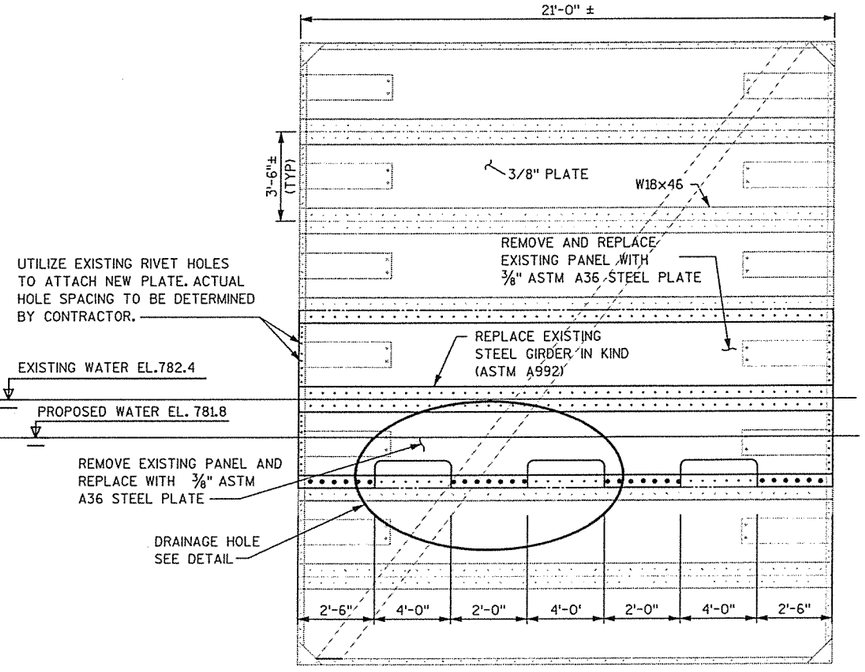

WEST LOCK GATE ELEVATION

(LOOKING WEST)

NOTES

1. SCOPE OF WORK SHALL INCLUDE REHABILITATING TWO SETS OF LOCK GATES (FOUR TOTAL). LIMITS OF PAINTING SHALL INCLUDE BOTH FACES OF FOUR LOCK GATES TOP TO BOTTOM OR THE LOWEST WATER ELEVATION AFTER DE-WATERING. (EL. 780.8 OR LOWER) GATES MAY BE REMOVED AND SHOP PAINTED. GATE REMOVAL AND REINSTALLATION SHALL BE CONSIDERED INCIDENTAL TO PAINTING BID ITEMS. DEWATERING NECESSARY FOR PAINTING SHALL BE CONSIDERED INCIDENTAL TO PAINTING BID ITEMS.
2. DRAINAGE HOLES NOT REQUIRED FOR EAST LOCK GATES. REPLACE STEEL SKINPLATE PANELS WITH CONTINUOUS ASTM A36 STEEL PLATES.
3. REHAB SHALL INCLUDE REPLACING A PORTION OF THE SKIN PLATE, ONE HORIZONTAL STEEL GIRDER, AND ALL NECESSARY CONNECTIONS.
4. ALL DIMENSIONS AND MEMBER SIZES SHOWN ARE APPROXIMATE. ACTUAL DIMENSIONS AND MEMBER SIZES ARE TO BE DETERMINED IN THE FIELD BY THE CONTRACTOR PRIOR TO GATE REHABILITATION.
5. ALL RIVETS ABOVE THE PROPOSED WATER SURFACE ELEVATION THAT REQUIRE REMOVAL SHALL BE REPLACED WITH S.S. A325 BUTTONHEAD BOLTS. BUTTONHEADS SHALL BE LOCATED ON THE UPSTREAM SIDE OF THE GATES.
6. ALL STEEL FOR GATE REHABILITATION SHALL BE PREPARED AND PAINTED WITH MOISTURE-CURED POLYEURETHANE AS PROVIDED IN THE SPECIAL PROVISIONS UNDER BID ITEM, PAINTING LOCK GATES AND EQUIPMENT.
7. THE CONTRACTOR SHALL PROVIDE A LEAD CONTAINMENT SYSTEM FOR PAINT REMOVAL AND SURFACE PREPARATION AS SPECIFIED IN THE SPECIAL PROVISIONS.

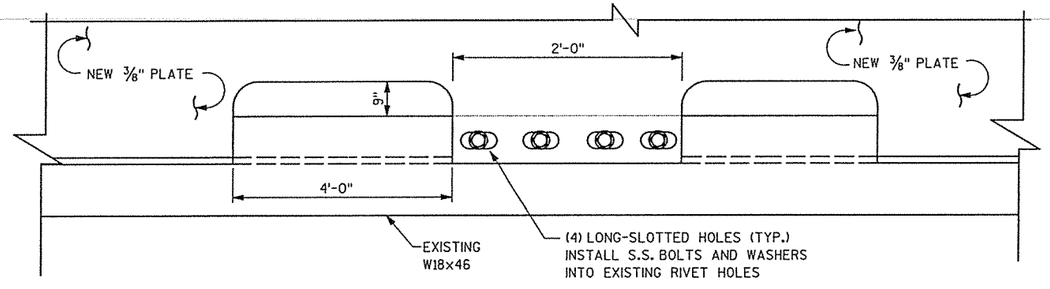

DRAINAGE HOLE DETAIL

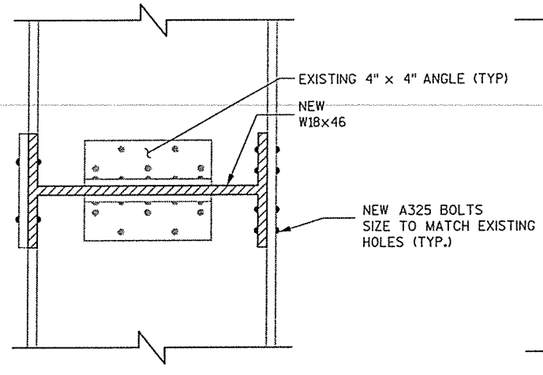

SECTION A-A

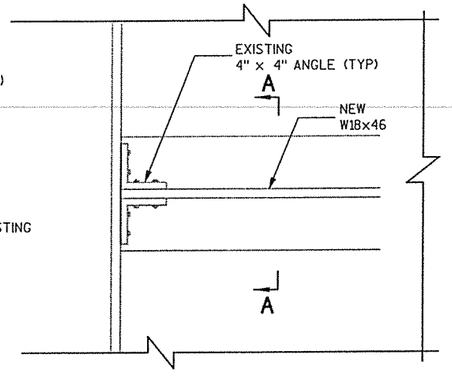

TYPICAL HORIZONTAL GIRDER CONNECTION DETAIL

DETAIL B-B

PROJECT NO: 6996-05-12	HWY: PORTAGE CANAL	COUNTY: COLUMBIA	LOCK GATE REHABILITATION	SHEET	E

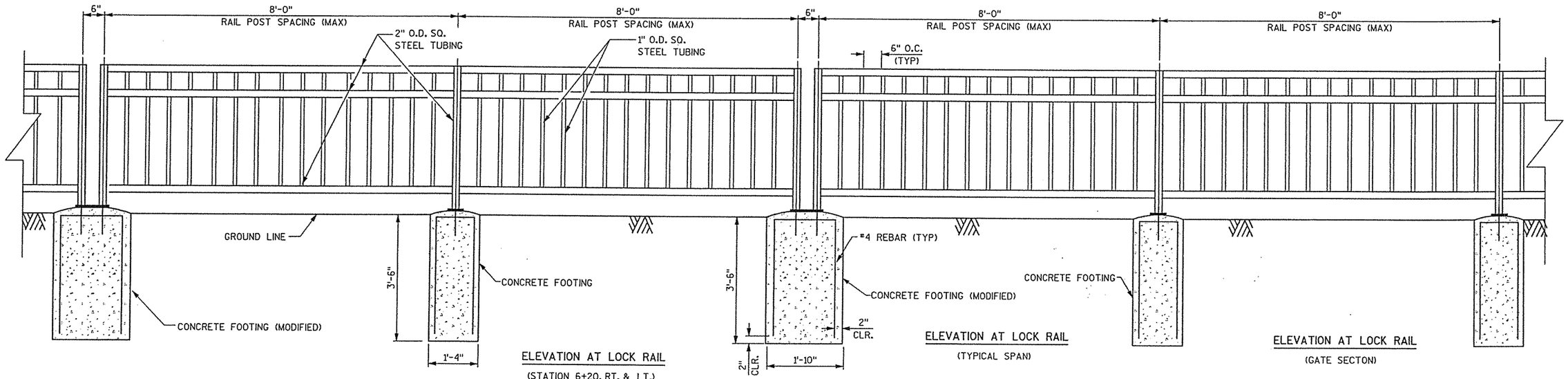

ELEVATION AT LOCK RAIL
(STATION 6+20, RT. & LT.)

ELEVATION AT LOCK RAIL
(TYPICAL SPAN)

ELEVATION AT LOCK RAIL
(GATE SECTON)

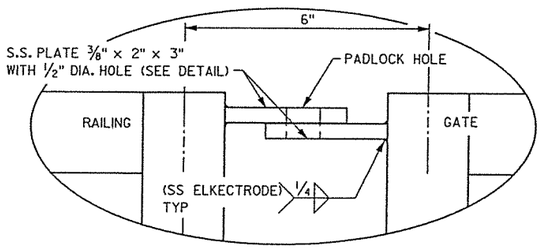

LOCK PLATE DETAIL

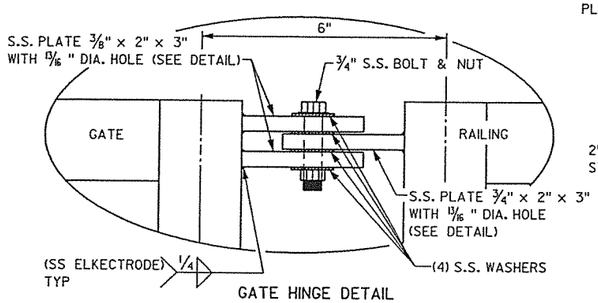

GATE HINGE DETAIL

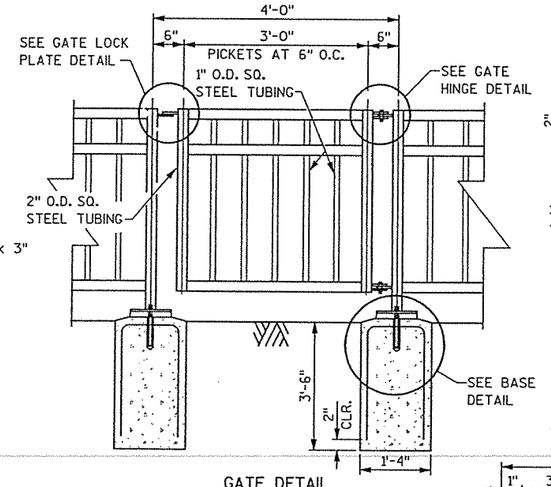

GATE DETAIL

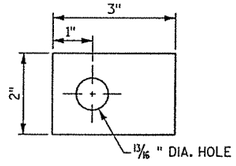

3/4" PLATE GATE HINGE

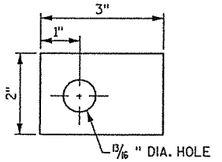

3/8" PLATE GATE HINGE

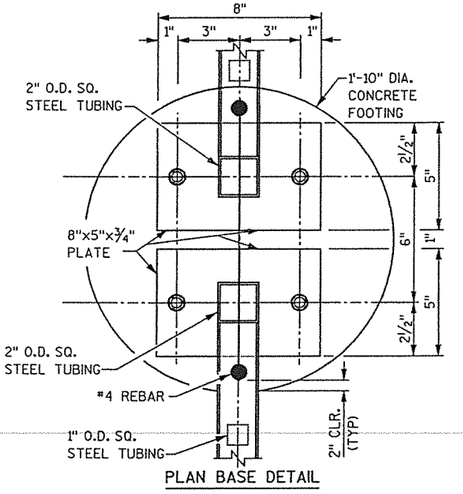

PLAN BASE DETAIL

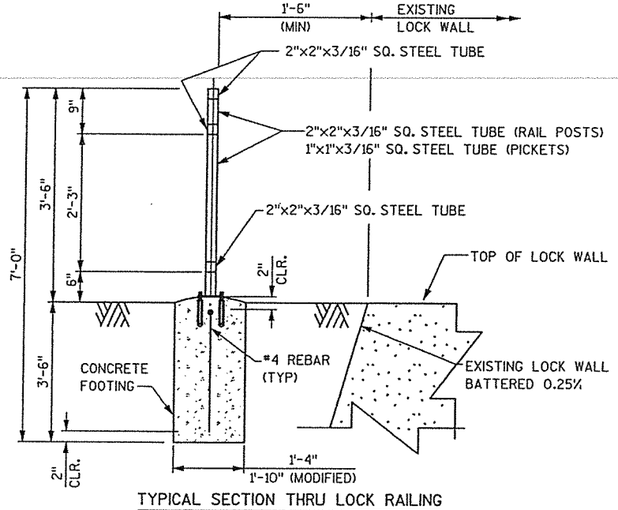

TYPICAL SECTION THRU LOCK RAILING

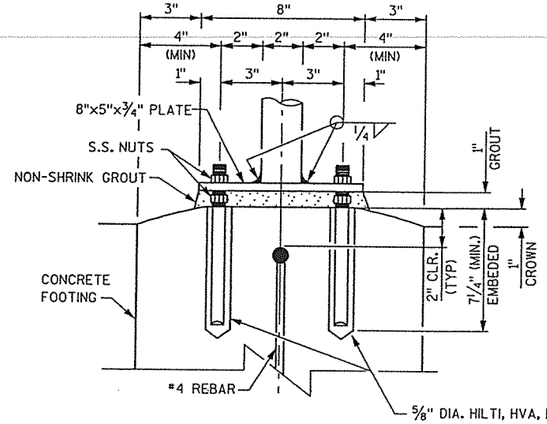

ELEVATION BASE DETAIL

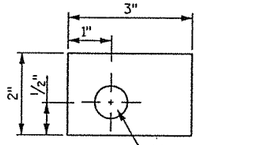

3/8" GATE LOCK PLATE

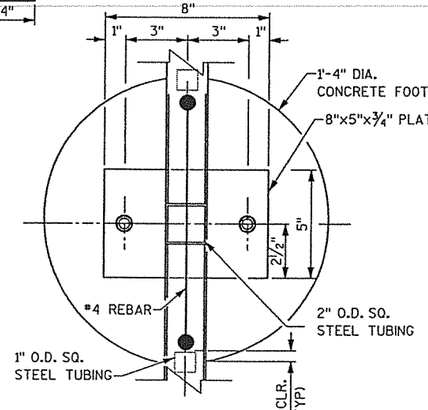

PLAN BASE DETAIL

NOTES

GRADES VARY ON CANAL WALL, FIELD VERIFY ALL ELEVATIONS AND TOP RAIL SLOPES PRIOR TO LOCK RAILING FABRICATION.

TOP RAIL OF LOCK RAILING SHALL BE PARALLEL WITH SURFACE GRADE AND PICKETS 90° VERTICAL. RAKE ACORDINGLY.

RAIL POSTS SPACING MAY BE VARIED TO ALLOW THE RAIL POST TO BE LOCATED AT THE CORNERS.

PROVIDE SHOP DRAWINGS.

LOCK RAILING SHALL BE PAINTED DARK BROWN.

S.S. - STAINLESS STEEL

PROJECT NO: 6996-05-12	HWY: PORTAGE CANAL	COUNTY: COLUMBIA	LOCK RAILING DETAIL	SHEET	E

FILE NAME : x:\16194-00\02001\tech\cadd\final plans 2005\021009_cd.dgn
PLOT DATE : 10/21/2005 PLOT BY : Madison PLOT NAME : PLOT SCALE : 10.000000 '/ IN

2

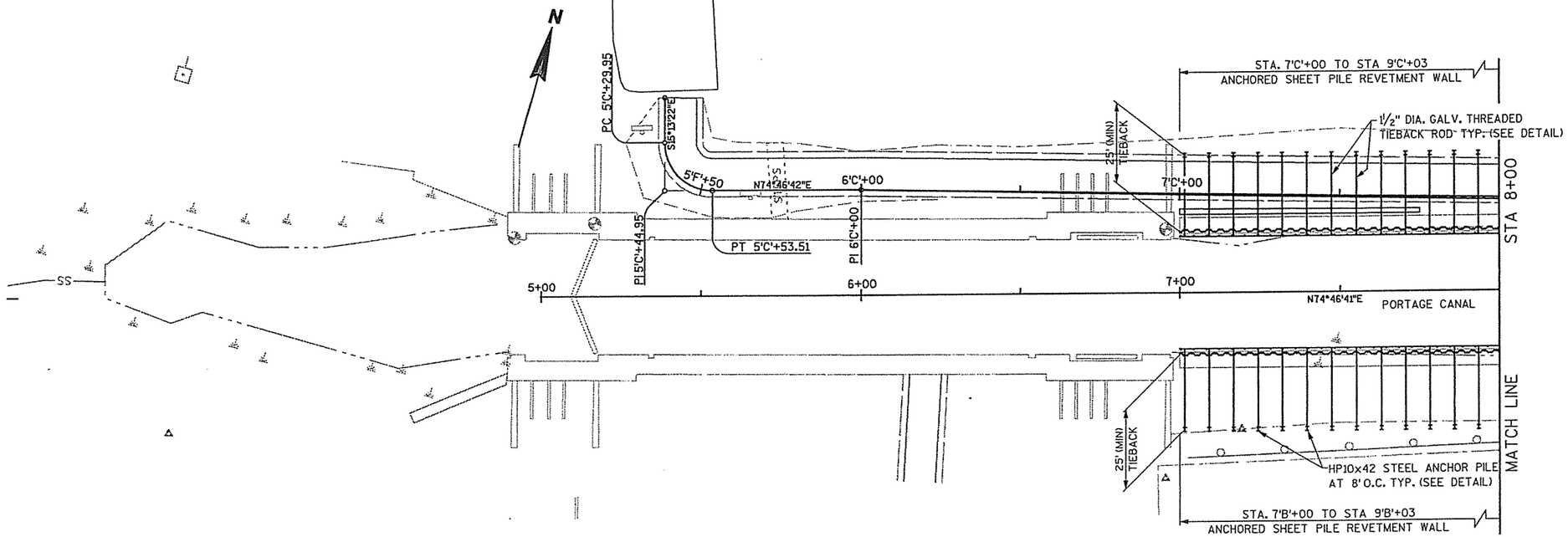

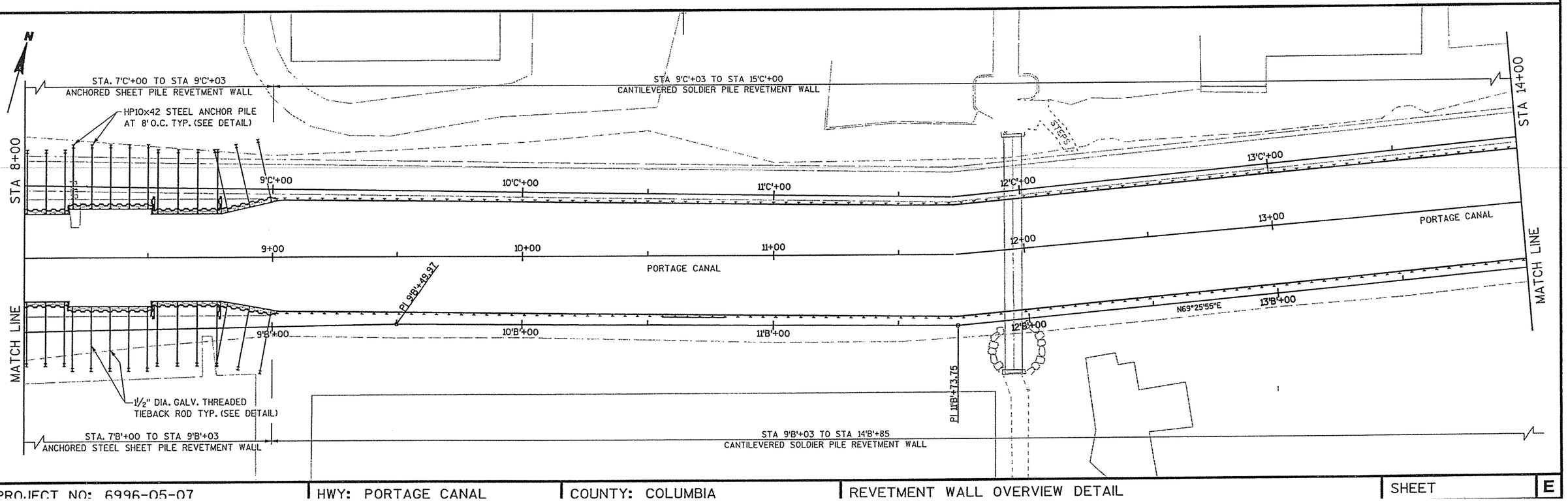

PROJECT NO: 6996-05-07	HWY: PORTAGE CANAL	COUNTY: COLUMBIA	REVETMENT WALL OVERVIEW DETAIL	SHEET E

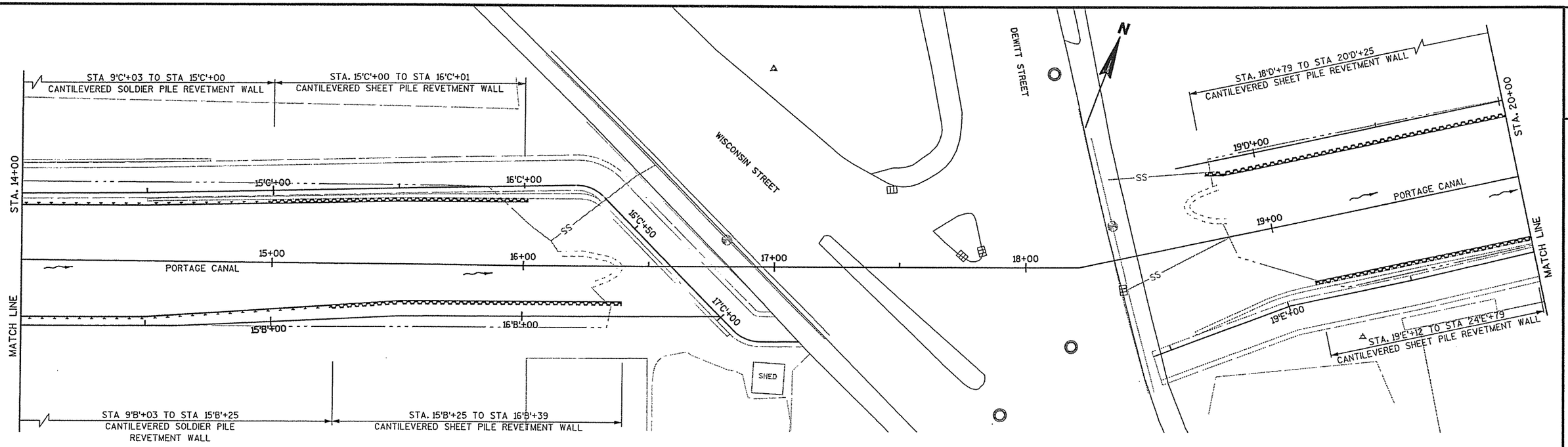

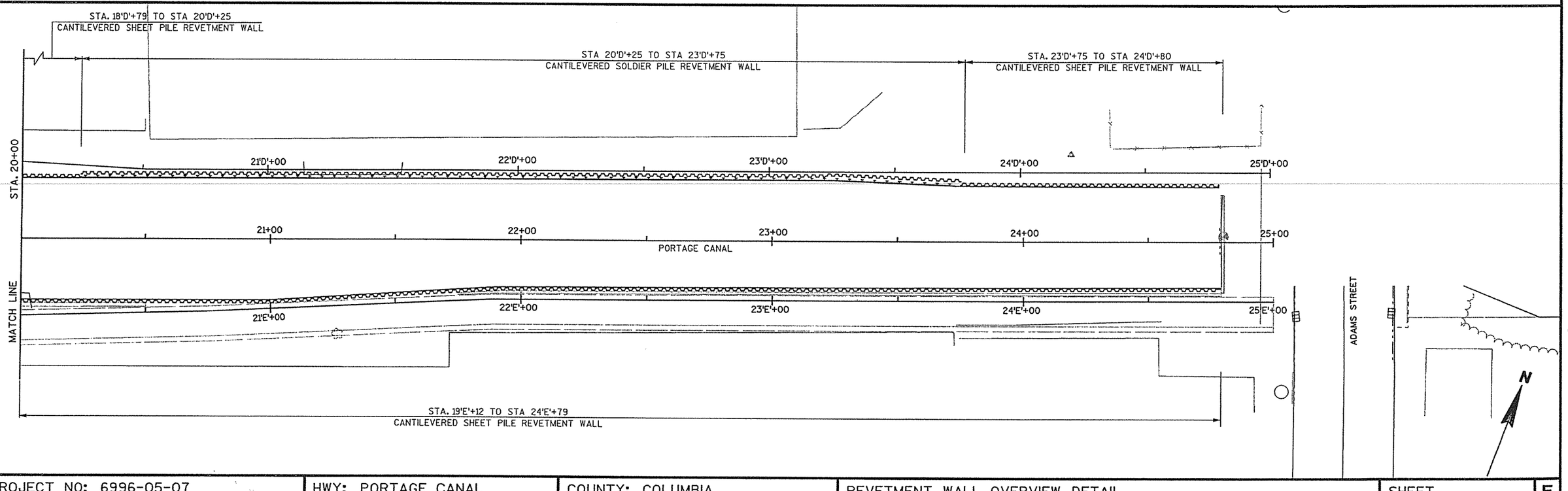

PROJECT NO: 6996-05-07	HWY: PORTAGE CANAL	COUNTY: COLUMBIA	REVETMENT WALL OVERVIEW DETAIL	SHEET	E

FILE NAME : x:\16194-00\02001\tech\cadd\final plans 2005\021011_cd.dgn PLOT DATE : 10/21/2005 PLOT BY : Madison PLOT NAME : PLOT SCALE : 40.00 ' / IN. WISDOT/CADDS SHEET 43

LEGEND

- ###### EROSION MAT CLASS I, TYPE A
- SILT FENCE
- TURBIDITY BARRIER
- BREAKER RUN

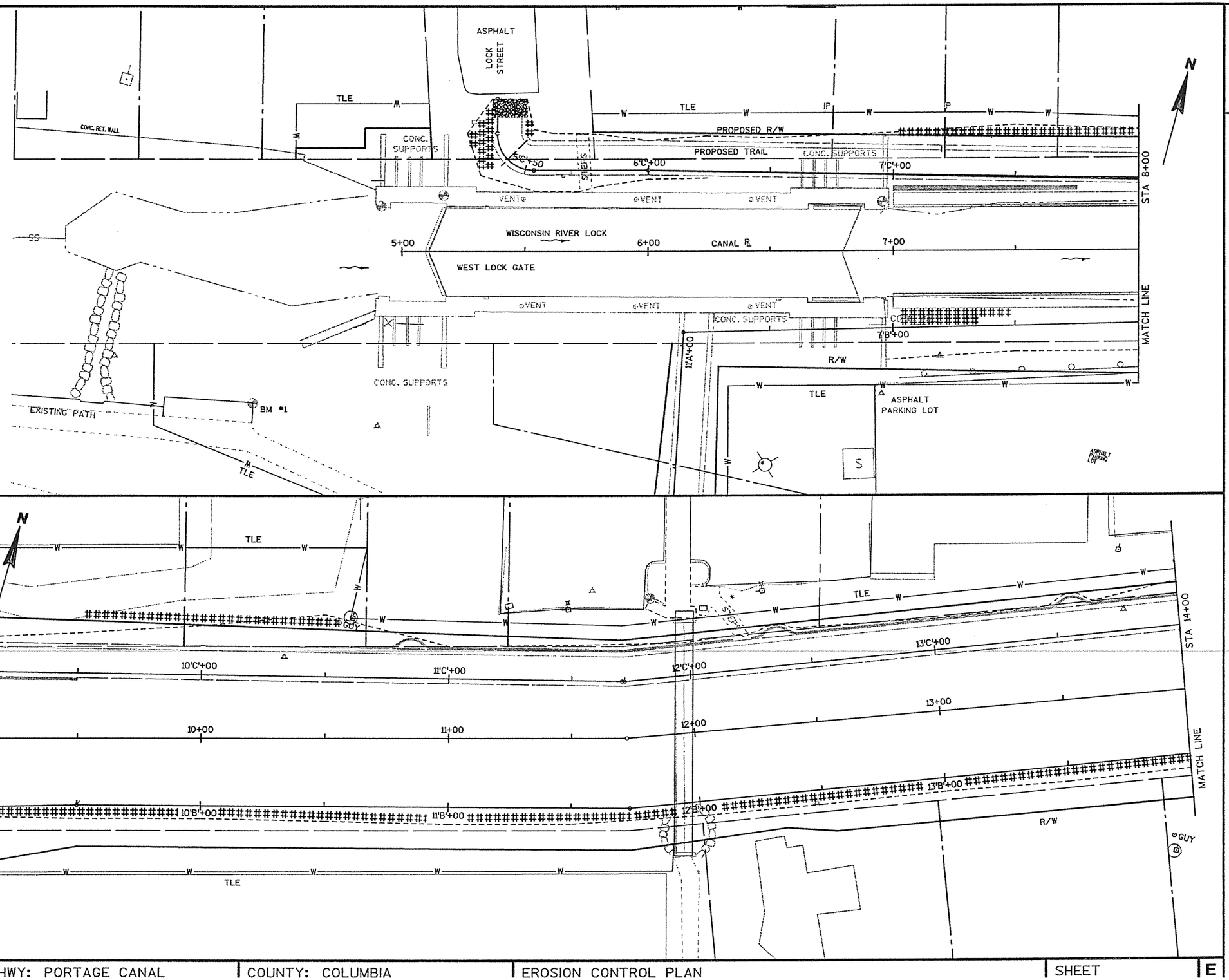

PROJECT NO: 6996-05-07	HWY: PORTAGE CANAL	COUNTY: COLUMBIA	EROSION CONTROL PLAN	SHEET E

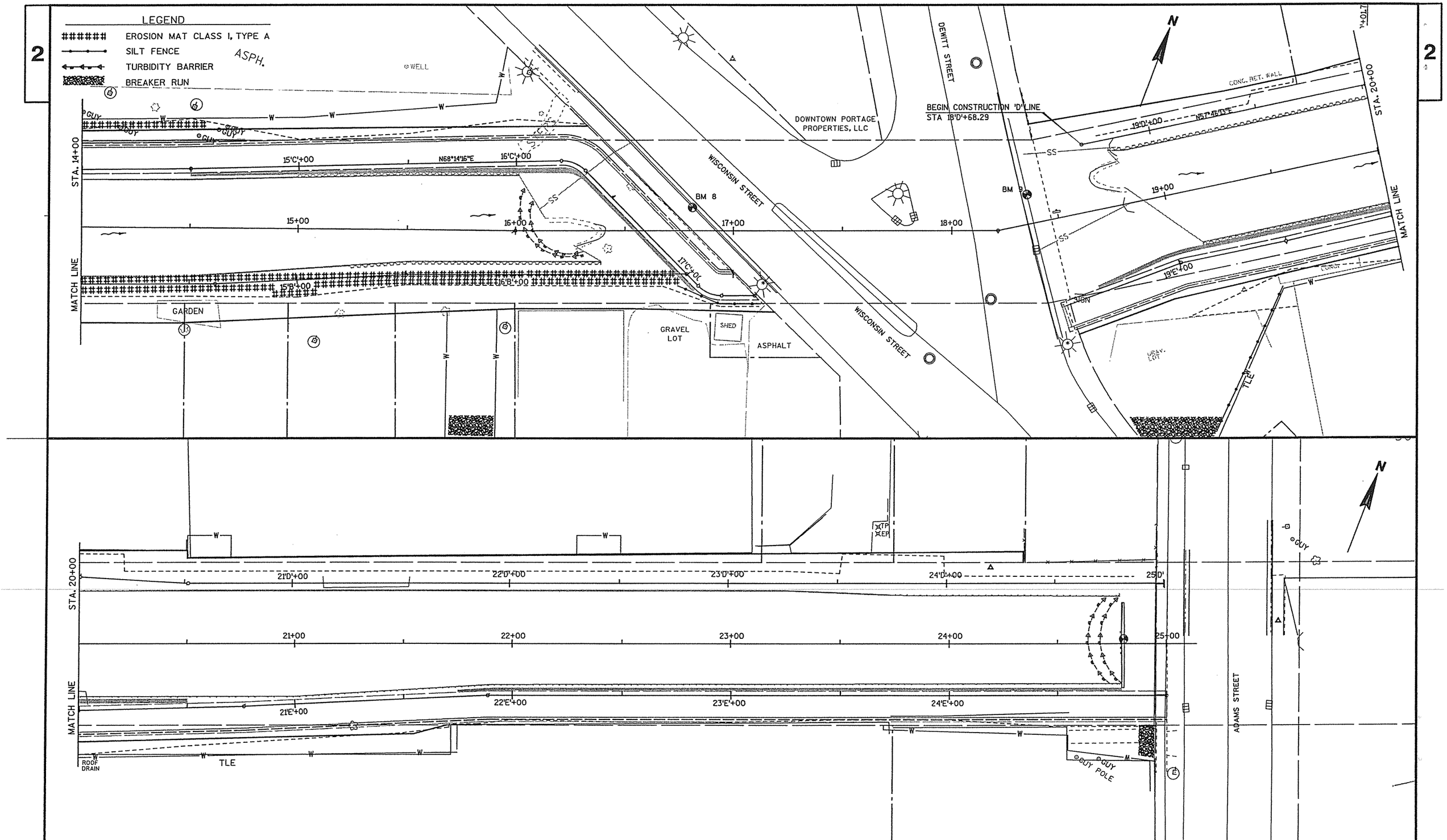

PROJECT NO: 6996-05-07	HWY: PORTAGE CANAL	COUNTY: COLUMBIA	EROSION CONTROL PLAN	SHEET	E

FILE NAME : X:\16194-00\02001\TECH\cadd\Final Plans 2005\022002 ec.dgn PLOT DATE : 10/21/2005 PLOT BY : Madison PLOT NAME : PLOT SCALE : 40.00 ' / IN

LEGEND

● TYPE 6 BASE REQ'D

2-INCH CONDUIT, SCHEDULE 80

NOTE: PLACE PULL STRING IN CONDUIT

CENTER OF LIGHT BASES ARE 3'-6" FROM EDGE OF PAVEMENT

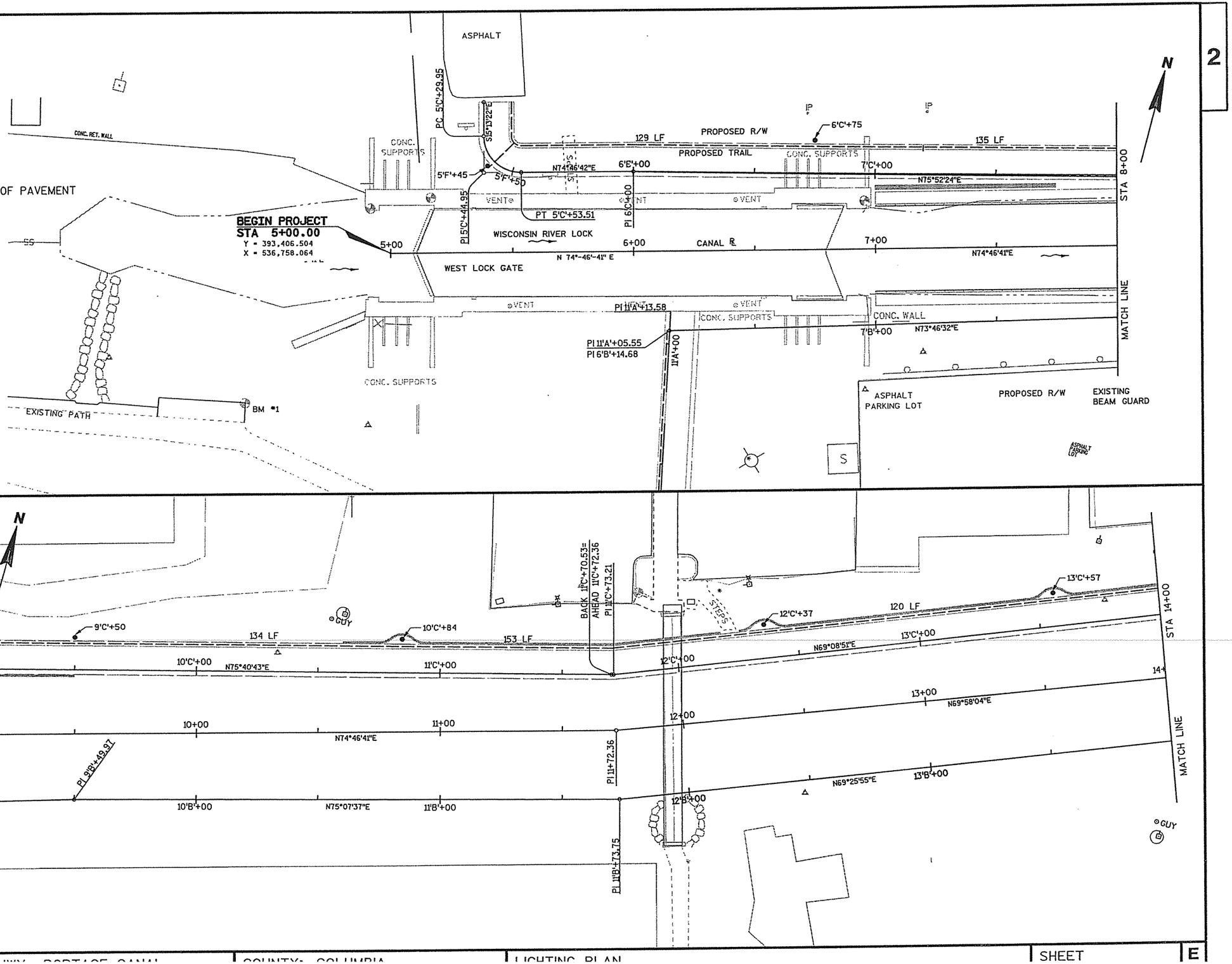

HWY. PORTAGE CANAL	COUNTY: COLUMBIA	LIGHTING PLAN	SHEET E

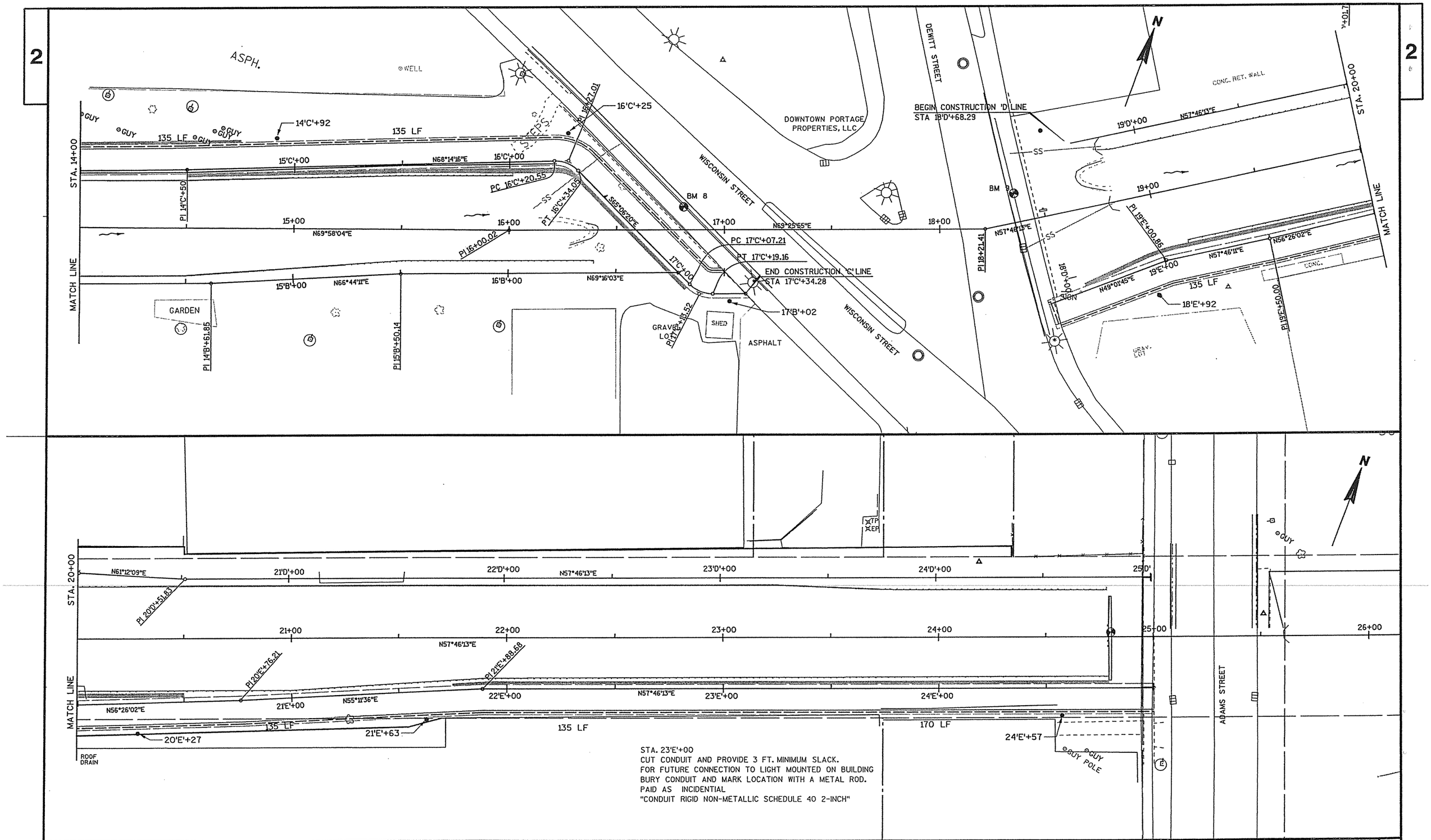

PROJECT NO: 6996-05-07	HWY: PORTAGE CANAL	COUNTY: COLUMBIA	LIGHTING PLAN	SHEET	E

FILE NAME : X:\16194-00\02001\TECH\cadd\Final Plans 2005\023502_lp.dgn PLOT DATE : 10/21/2005 PLOT BY : Madison PLOT NAME : PLOT SCALE : 40.00 ' / IN. WISDOT/CADDS SHEET 42

2

2

LOCK STREET

EDGEWATER ST.

USH 51 (WISCONSIN ST.)

DEWITT ST.

ADAMS STREET

W. MULLETT ST.

E. MULLETT ST.

WARREN ST.

WISCONSIN RIVER

NOTE:
TRAFFIC CONTROL ON DEWITT STREET SHOULD FOLLOW SAME LAYOUT AS SHOWN ON WISCONSIN STREET. WHEN WORK IS CONDUCTED IN THAT AREA.

SIDEWALKS TO BE CLOSED ONLY DURING CONSTRUCTION OPERATIONS. SIDEWALKS ARE TO BE REMAIN OPEN DURING NON CONSTRUCTION HOURS.

N

(A) ROAD WORK AHEAD W20-1

(B) SHOULDER WORK W21-5

(C) END ROAD WORK G20-2A 48" X 24"

(D) SIDEWALK CLOSED R9-9 24" X 12"

(E) SIDEWALK CLOSED USE OTHER SIDE R9-10 24" X 12"

BARRICADE WITH SIGN

SIGN ON TEMPORARY POST

PROJECT NO: 6996-05-07	HWY: PORTAGE CANAL	COUNTY: COLUMBIA	TRAFFIC CONTROL ADVANCE WARNING	SHEET E

2

N

MATCH LINE STA 10"A"+80

BEGIN PROJECT
STA 10"A"+00
N = 393,301.559
E = 536,899.468

10"A"+00

CONC. RET. WALL

SS

BEGIN PROJECT
STA 5+00.00
Y = 393,406.504
X = 536,758.064

BEGIN CONSTRUCTION
STA 15"C"+15.95
N = 393,476.437
E = 536,778.941

PAVEMENT MARKING 4-INCH EPOXY (YELLOW)

5'C'+50 STEPS 6'C'+00 7'C'+00

5'-0"

5+00 6+00 7+00

STA 8+00

MATCH LINE

MATCH LINE STA 10"A"+80

① END MR4-6 24" X 8"	② BIKE ROUTE D11-1 24" X 18"	③ NO MOTOR VEHICLES R5-3 24" X 18"	④ W11-1 30" X 30"	⑤ STOP R1-1 24" X 24"	⑥ W1-1R 24" X 24"	⑦ W1-1L 24" X 24"	⑧ W1-2R 24" X 24"	⑨ W1-2L 24" X 24"	⑩ W3-1 30" X 30"

WOOD POST

N

PAVEMENT MARKING 4-INCH EPOXY (YELLOW)

MH

GUY

5'-0"

STA 8+00

9'C'+00 10'C'+00 11'C'+00 12'C'+00 13'C'+00

N75°40'43"E N69°08'51"E

PI 8'C'+50

9+00 10+00 11+00 12+00 13+00

N74°46'41"E N74°46'41"E N69°58'04"E

BACK 11'C'+70.53=
AHEAD 11'C'+72.36
PI 11'C'+73.21

PI 11+72.36

STEPS

STA 14+00

MATCH LINE

MATCH LINE

GUY

PROJECT NO: 6996-05-07	HWY: PORTAGE CANAL	COUNTY: COLUMBIA	PERMANENT SIGNING AND PAVEMENT MARKING	SHEET	E

2

PAVEMENT MARKING 4-INCH EPOXY (YELLOW)

GUY

5'-0"

STA. 14+00

15'C'+00

16'C'+00

16'C'+50

STEPS

SS

BM 8

WISCONSIN STREET

DOWNTOWN PORTAGE PROPERTIES, LLC

T STREET

15+00

16+00

17+00

18+00

BM 8

MATCH LINE

GARDEN

GRAVEL LOT

SHED

ASPHALT

N

WOOD POST

* SIGN REQUIRES LONGER POST SEE MISCELLANEOUS QUANTITIES FOR DETAILS.

① END MR4-6 24" X 8"	② BIKE ROUTE D11-1 24" X 18"	③ NO MOTOR VEHICLES R5-3 24" X 18"	④ W11-1 30" X 30"	⑤ STOP R1-1 24" X 24"	⑥ W1-1R 24" X 24"	⑦ W1-1L 24" X 24"	⑧ W1-2R 24" X 24"	⑨ W1-2L 24" X 24"	⑩ W3-1 30" X 30"	⑪ USE CROSSWALK R9-3bR 18" X 12"	⑫ USE CROSSWALK R9-3bL 18" X 12"

W. MULLETT STREET

WARREN STREET

WISCONSIN STREET

MATCH LINE

STA. 20+00

19'F'+00

5'-0"

SIGN

PAVEMENT MARKING 4-INCH EPOXY (YELLOW)

GRAVEL LOT

2

STA. 20+00

21+00

22+00

23+00

24+00

25+00

ADAMS STREET

GUY

MH

SIGN

21'F'+00

22'F'+00

23'F'+00

24'F'+00

25'F'+00

5'-0"

PAVEMENT MARKING 4-INCH EPOXY (YELLOW)

MATCH LINE

N

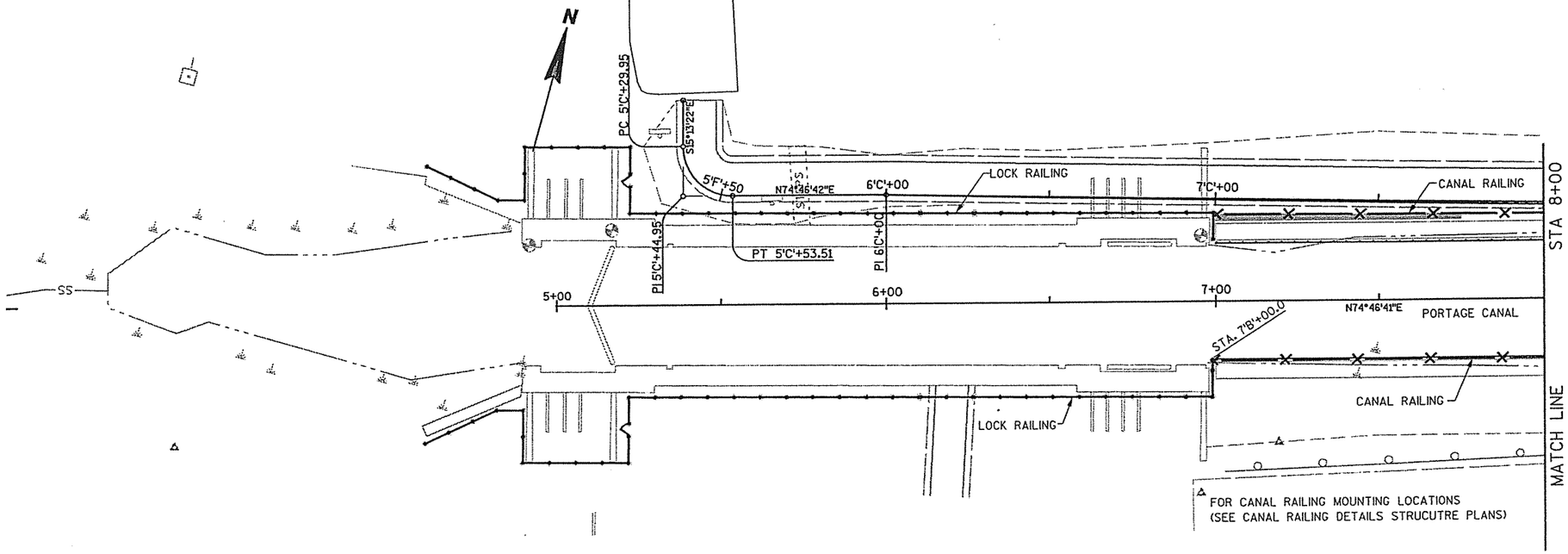

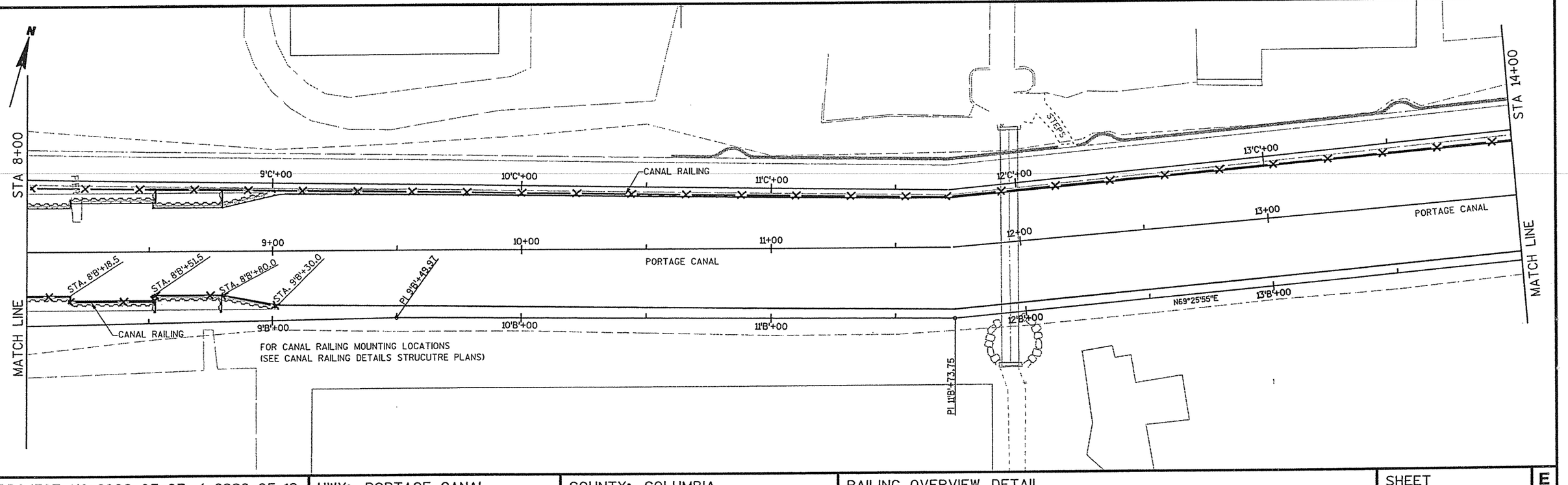

PROJECT NO: 6996-05-07 / 6996-05-12	HWY: PORTAGE CANAL	COUNTY: COLUMBIA	RAILING OVERVIEW DETAIL	SHEET	E

PLOT DATE : 10-27-2005 PLOT BY : Madigan PLOT NAME : PLOT SCALE : 40.00 ' / IN. WISDOT/CADDS SHEET 43

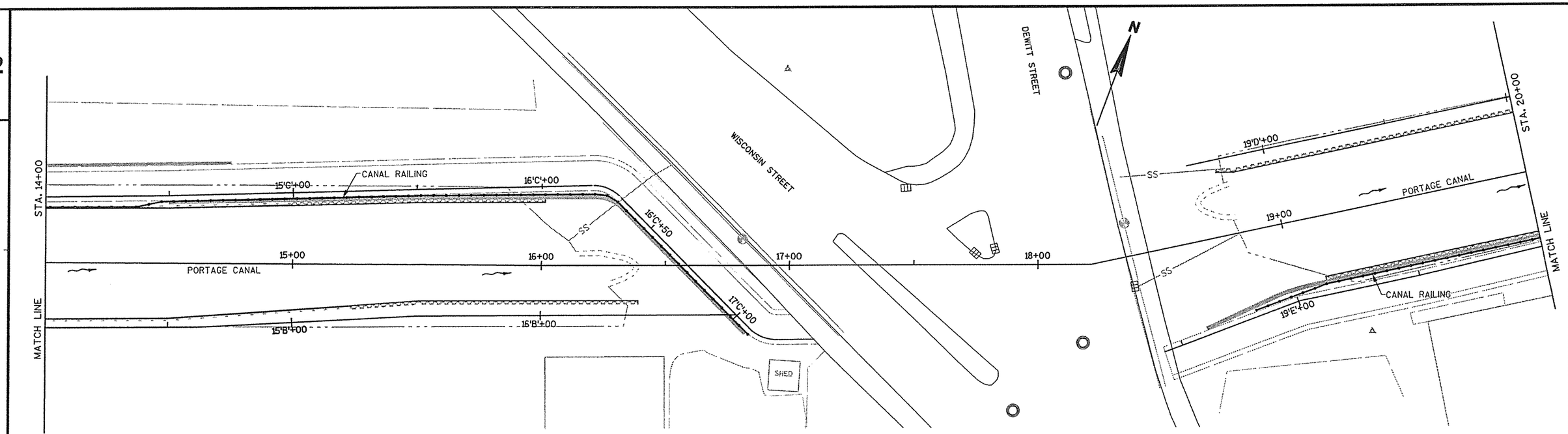

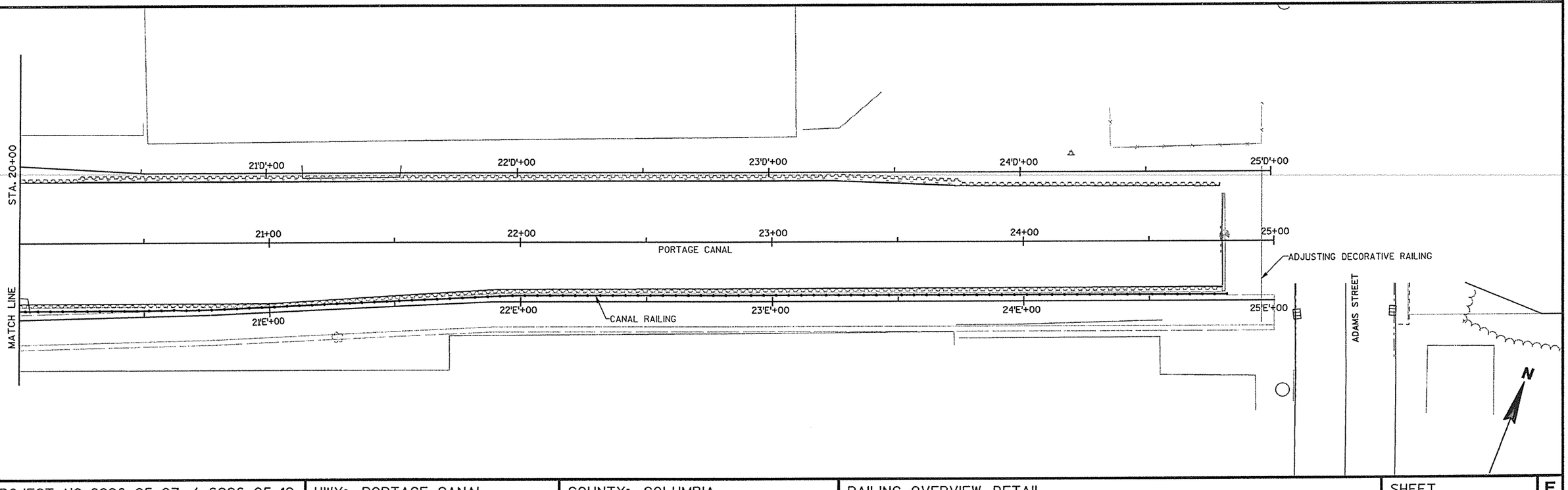

PROJECT NO: 6996-05-07 / 6996-05-12	HWY: PORTAGE CANAL	COUNTY: COLUMBIA	RAILING OVERVIEW DETAIL	SHEET	E

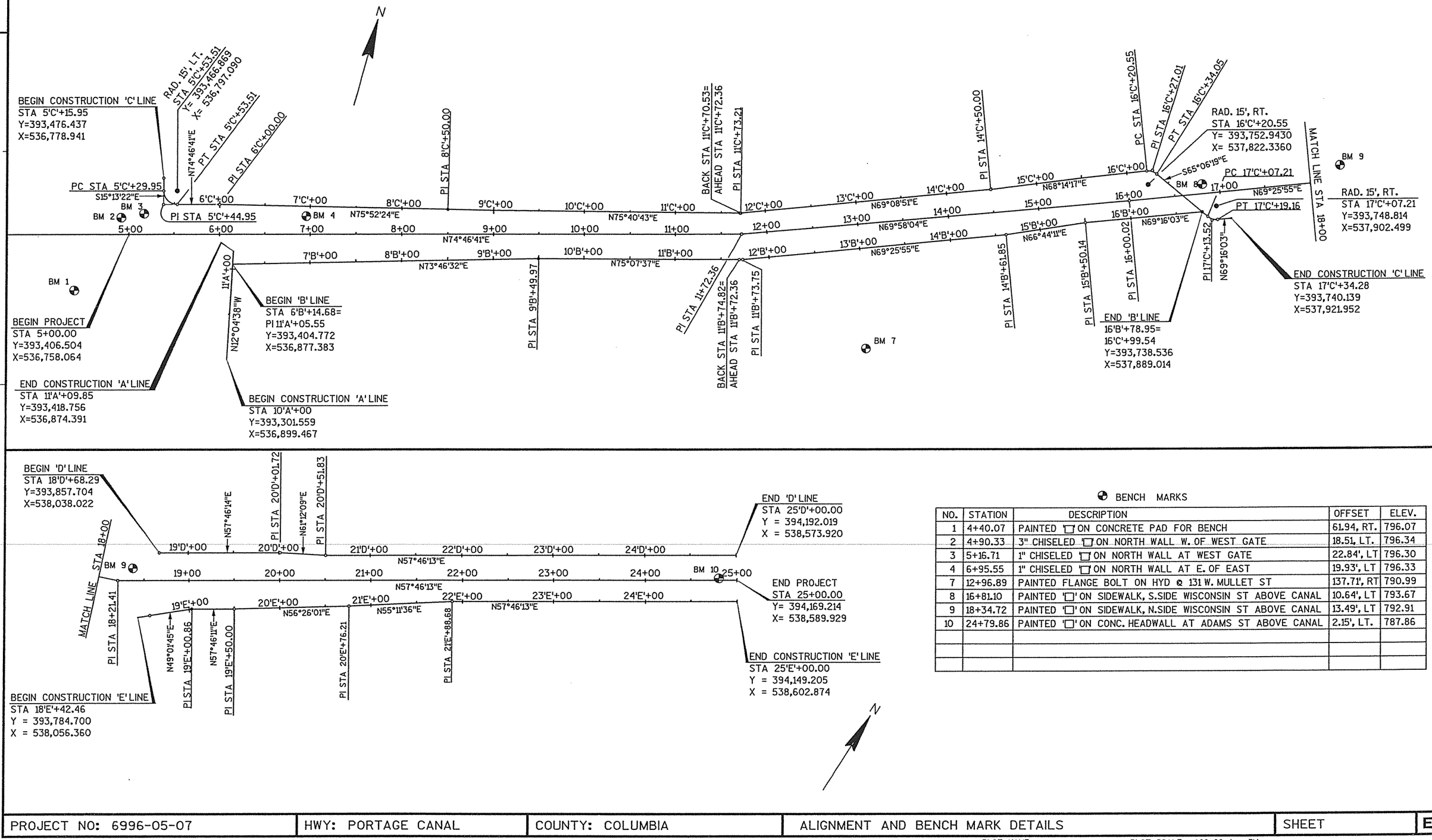

BENCH MARKS

NO.	STATION	DESCRIPTION	OFFSET	ELEV.
1	4+40.07	PAINTED '□' ON CONCRETE PAD FOR BENCH	61.94, RT.	796.07
2	4+90.33	3" CHISELED '□' ON NORTH WALL W. OF WEST GATE	18.51, LT.	796.34
3	5+16.71	1" CHISELED '□' ON NORTH WALL AT WEST GATE	22.84', LT	796.30
4	6+95.55	1" CHISELED '□' ON NORTH WALL AT E. OF EAST	19.93', LT	796.33
7	12+96.89	PAINTED FLANGE BOLT ON HYD @ 131 W. MULLET ST	137.71', RT	790.99
8	16+81.10	PAINTED '□' ON SIDEWALK, S.SIDE WISCONSIN ST ABOVE CANAL	10.64', LT	793.67
9	18+34.72	PAINTED '□' ON SIDEWALK, N.SIDE WISCONSIN ST ABOVE CANAL	13.49', LT	792.91
10	24+79.86	PAINTED '□' ON CONC. HEADWALL AT ADAMS ST ABOVE CANAL	2.15', LT.	787.86

PROJECT NO: 6996-05-07	HWY: PORTAGE CANAL	COUNTY: COLUMBIA	ALIGNMENT AND BENCH MARK DETAILS	SHEET	E

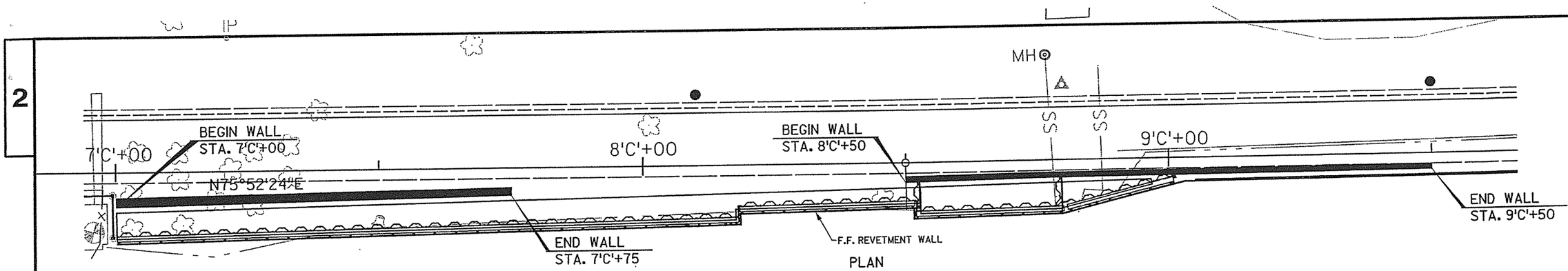

PLAN

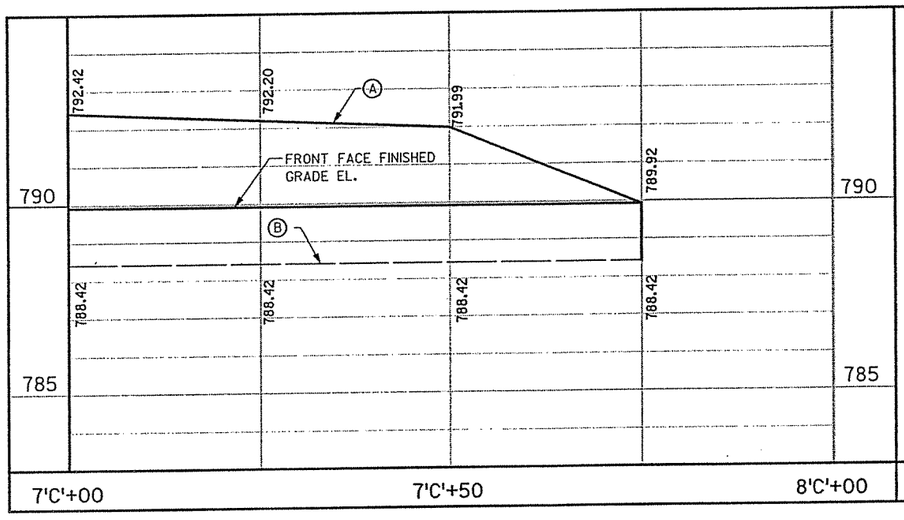

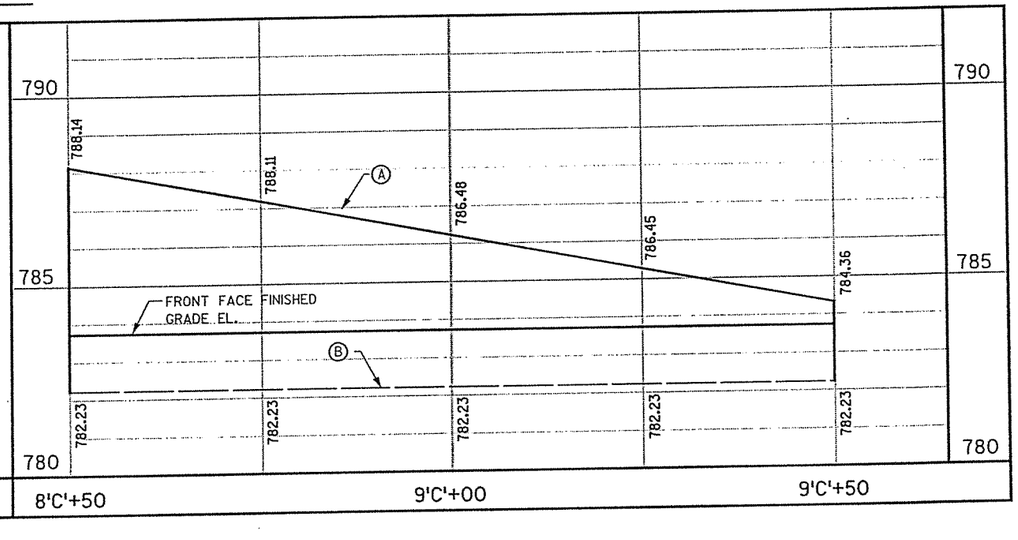

GEOMETRY TABLE

STATION	★ OFFSET FROM "C" LINE TO F.F. OF WALL	ELEVATION TOP OF WALL Ⓐ	ELEVATION BOTTOM OF WALL Ⓑ
7'C'+00	6.78', RT.	792.42	788.42
7'C'+25	6.11', RT.	792.20	788.42
7'C'+50	5.63', RT.	791.99	788.42
7'C'+75	5.61', RT.	789.92	788.42
8'C'+50	3.72', RT.	788.14	782.23
8'C'+75	3.33', RT.	788.11	782.23
9'C'+00	3.25', RT.	786.48	782.23
9'C'+25	3.12', RT.	786.45	782.23
★ 9'C'+50	3.00', RT.	784.36	782.23

★ OFFSET REFERENCED TO THE ℄ 'C' LINE AND THE F.F. FINISHED GRADE OF THE WALL AT THE BASE.

DESIGN SOIL PARAMETERS

ELEVATION	SOIL DESCRIPTIONS	SOIL UNIT WEIGHT (pcf)	COHESION (psf)	ANGLE OF INTERNAL FRICTION (DEGREES)
EL. 795 - 789	RETAINED SOIL CONSISTING OF EXISTING FILL MATERIAL	118	0	28
EL. 789 - 776	EXISTING FILL MATERIAL	110	0	28
EL. 776 - 764	NATIVE FINE TO MEDIUM SAND	112	0	31

ELEVATION

(LOOKING AT F.F. OF WALL)

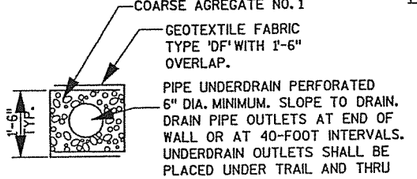

PIPE UNDERDRAIN DETAIL

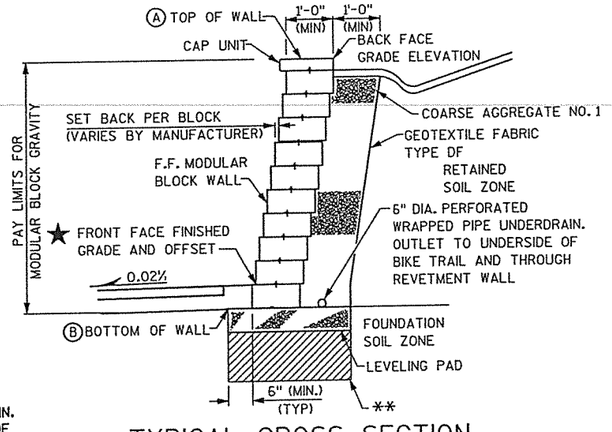

TYPICAL CROSS SECTION

(RAILING NOT SHOWN)

**SOILS BELOW LEVELING PAD WHICH ARE SUBJECT TO FROST HEAVE SHALL BE REMOVED TO AN ELEVATION 3'-6" BELOW "FINISHED GRADE" AND REPLACED WITH GRADE 1 GRANULAR BACKFILL. COST INCIDENTAL TO THE BID ITEM "WALL MODULAR BLOCK GRAVITY"

DESIGN DATA

THE CONTRACTOR SHALL PROVIDE COMPLETE DESIGN, PLANS, DETAILS, SPECIFICATONS AND SHOP DRAWINGS FOR THE RETAINING WALL. THE RETAINING WALL MANUFACTURER SHALL PROVIDE TECHNICAL ASSISTANCE TO THE CONTRACTOR DURING CONSTRUCTION. THE COST OF FURNISHING THESE ITEMS SHALL BE INCLUDED IN THE BID ITEM "WALL MODULAR BLOCK GRAVITY".

PLANS, ELEVATIONS AND DETAILS SHOWN ON THIS DRAWING ARE INTENDED TO INDICATE WALL LOCATIONS, LENGTHS, HEIGHTS AND DETAILS COMMON TO THE WALL SYSTEM SELECTED. THE CONTRACTOR SHALL VERIFY THAT THE WALL SYSTEM SELECTED WILL CONFORM TO THE REQUIRED ALIGNMENTS AND DETAILS.

THE RETAINING WALL IS TO BE DESIGNED USING THE ELEVATIONS GIVEN ON THIS SHEET.

DESIGN FOR RETAINING WALL TO PROVIDE FOR PROPOSED GRADE SLOPED BEHIND WALL.

DESIGN RETAINING WALL FOR A LIVE LOAD SURCHARGE OF 120 P.S.F.

THE WALL COLOR SHALL BE TAN AND HAVE A SPLIT FACE TEXTURE. (SIMILAR TO THE COLOR AND TEXTURE OF THE "SANDSTONE" BLOCK PRODUCED BY ROCKWOOD RETAINING WALLS).

DRAWINGS SHALL NOT BE SCALED.

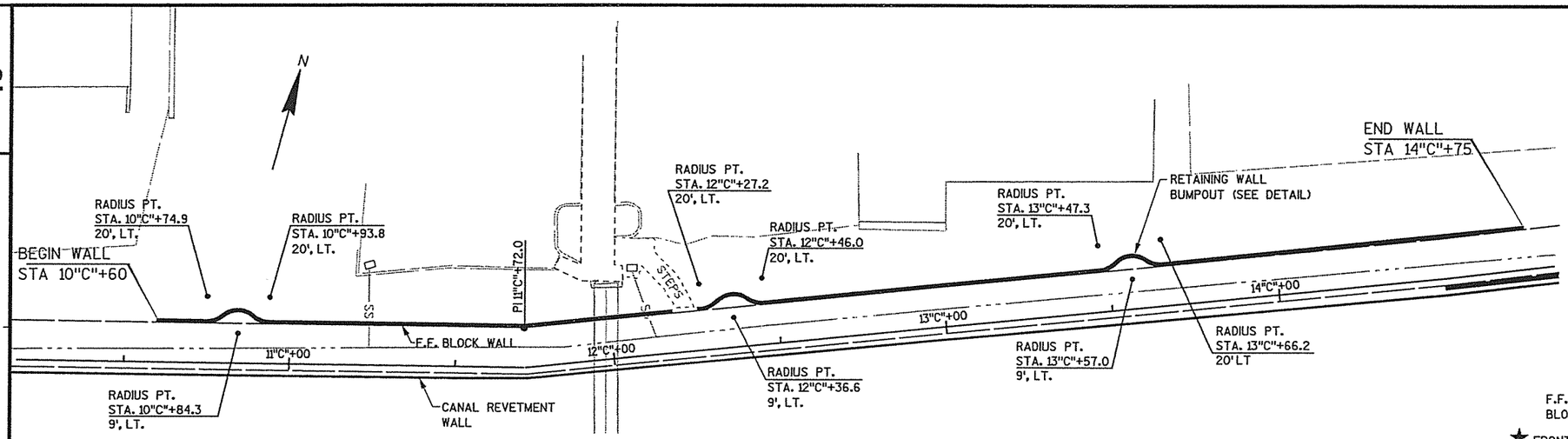

DESIGN DATA

THE CONTRACTOR SHALL PROVIDE COMPLETE DESIGN, PLANS, DETAILS, SPECIFICATONS AND SHOP DRAWINGS FOR THE RETAINING WALL. THE RETAINING WALL MANUFACTURER SHALL PROVIDE TECHNICAL ASSISTANCE TO THE CONTRACTOR DURING CONSTRUCTION. THE COST OF FURNISHING THESE ITEMS SHALL BE INCLUDED IN THE BID ITEM "WALL MODULAR BLOCK GRAVITY."

PLANS, ELEVATIONS AND DETAILS SHOWN ON THIS DRAWING ARE INTENDED TO INDICATE WALL LOCATIONS, LENGTHS, HEIGHTS AND DETAILS COMMON TO THE WALL SYSTEM SELECTED. THE CONTRACTOR SHALL VERIFY THAT THE WALL SYSTEM SELECTED WILL CONFORM TO THE REQUIRED ALIGNMENTS AND DETAILS.

THE RETAINING WALL IS TO BE DESIGNED USING THE ELEVATIONS GIVEN ON THIS SHEET.

DESIGN FOR RETAINING WALL TO PROVIDE FOR PROPOSED GRADE SLOPED BEHIND WALL.

DESIGN RETAINING WALL FOR A LIVE LOAD SURCHARGE OF 120 P.S.F.

THE WALL COLOR SHALL BE TAN AND HAVE A SPLIT FACE TEXTURE. (SIMILAR TO THE COLOR AND TEXTURE OF THE "SANDSTONE" BLOCK PRODUCED BY ROCKWOOD RETAINING WALLS).

DRAWINGS SHALL NOT BE SCALED.

PLAN

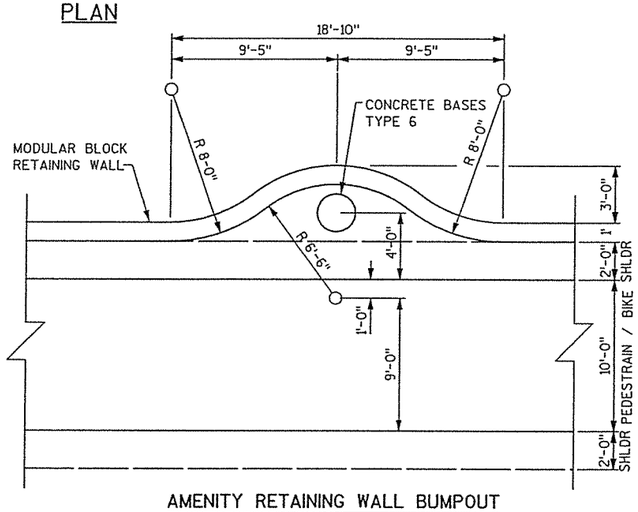

AMENITY RETAINING WALL BUMPOUT

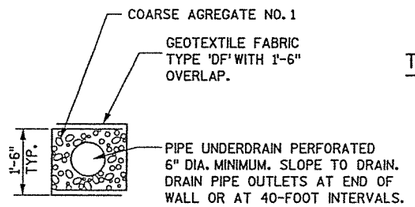

PIPE UNDERDRAIN DETAIL

COST INCIDENTAL TO THE BID ITEM "WALL MODULAR BLOCK GRAVITY"

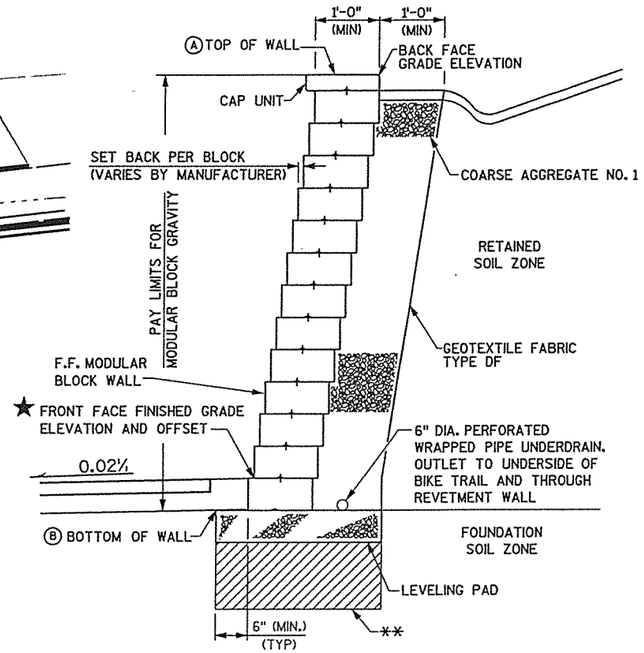

TYPICAL CROSS SECTION OF RETAINING WALL

** SOILS BELOW LEVELING PAD WHICH ARE SUBJECT TO FROST HEAVE SHALL BE REMOVED TO AN ELEVATION 3'-6" BELOW "FINISHED GRADE" AND REPLACED WITH GRADE 1 GRANULAR BACKFILL. COST INCIDENTAL TO THE BID ITEM "WALL MODULAR BLOCK GRAVITY"

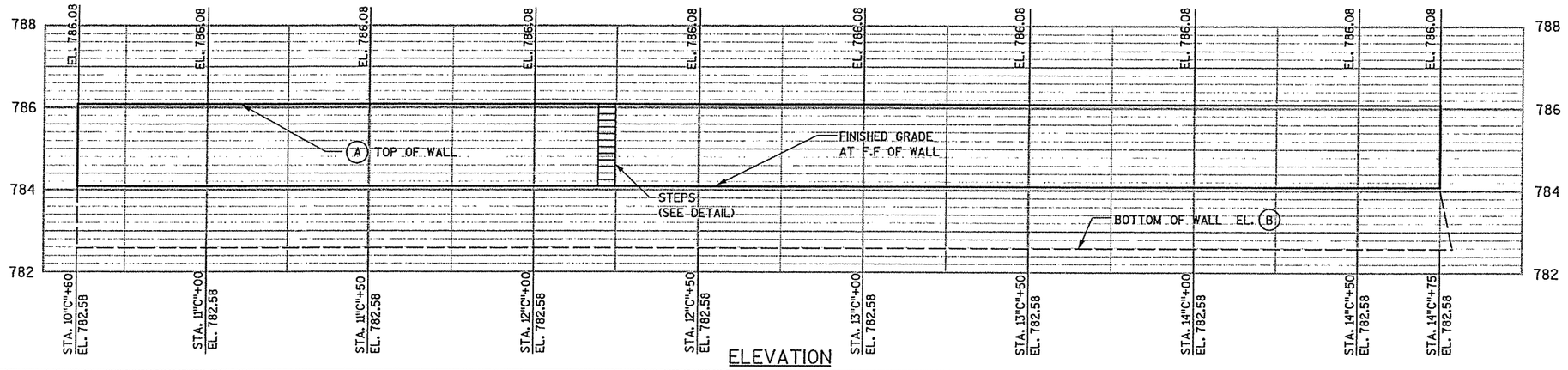

ELEVATION

SOIL PARAMETERS*

BORING NO.	STRATUM LOCATIONS & SOIL DESCRIPTIONS	UNIT WEIGHT (pcf)	FRICTION ANGLE (DEGREES)	COHESION (psf)
1	RETAINED SOIL BOTTOM OF EXCAVATION TO TOP OF WALL	120	30	0
① 1	NATIVE SUBGRADE TO EL. 770.00 BOTTOM OF EXCAVATION	120	30	0

* DESIGN WALL FOR THESE VALUES

① SOIL BORINGS INDICATE LOOSE SOILS NEARBY WHICH SHOULD BE CONSIDERED DURING PROPOSED WALL DESIGN.

GEOMETRY TABLE

STATION	★ OFFSET FROM "C" LINE TO F.F. OF WALL	ELEVATON TOP OF WALL (A)	ELEVATON BOTTOM OF WALL (B)
11"C"+00	12.0'LT	786.08	782.58
11"C"+72	12.0'LT	786.08	782.58
14"C"+75	12.0'LT	786.08	782.58

★ OFFSET REFERENCED TO THE ℄ 'C' LINE AND F.F. FINISHED GRADE OF WALL AT THE BASE

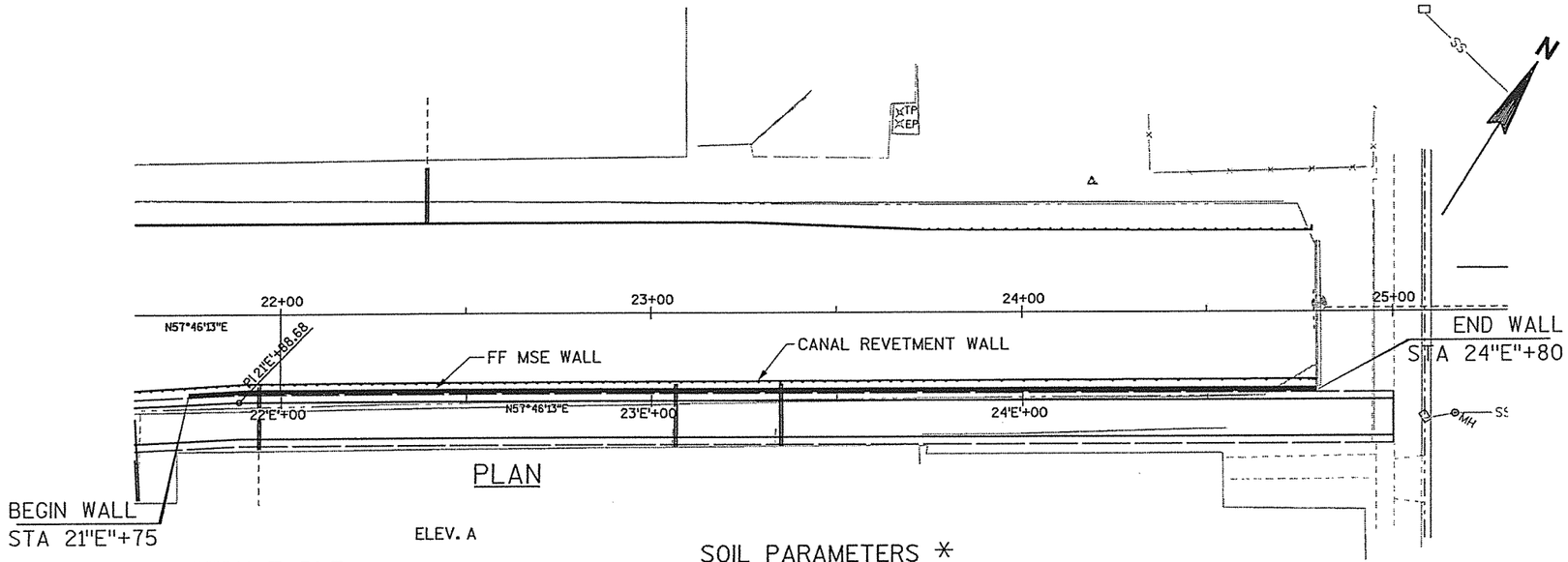

GEOMETRY TABLE

STATION	★ OFFSET TO F.F. OF WALL	TOP TOP OF WALL ELEV. A	BOTTOM OF WALL ELEV. B
21"E"+75	4.16' LT	784.36	782.30
22"E"+00	4.16' LT	784.84	782.30
22"E"+50	3.93' LT	785.80	782.30
23"E"+00	4.03' LT	786.65	782.30
23"E"+50	4.13' LT	787.05	782.30
24"E"+00	4.23' LT	787.36	782.30
24"E"+50	4.33' LT	787.66	782.30
24"E"+79.5	4.33' LT	787.66	782.30

★ OFF SET REFERENCED TO ℄ 'E'LINE

SOIL PARAMETERS ✳

ELEVATION	SOIL DESCRIPTIONS	SOIL UNIT WEIGHT (pcf)	COHESION (psf)	ANGLE OF INTERNAL FRICTION (DEGREES)
EL. 790-783	RETAINED SOIL CONSISTING OF NEW FILL MATERIAL	120	0	30
* EL. 783-780	NATIVE SILTY FINE SAND WITH SOME GRAVEL	118	0	29
EL. 780-778	NATIVE FINE TO MEDIUM SAND WITH GRAVEL	110	0	28
EL. 778-772	NATIVE FINE TO MEDIUM SAND WITH GRAVEL	112	0	31
EL. 772-759	NATIVE FINE TO MEDIUM SAND WITH GRAVEL	115	0	33
EL. 791-783.5	REINFORCED (INFILL) ZONE SOIL	120	0	30

* SOIL BORINGS INDICATE LOOSE SOILS NEARBY WHICH SHOULD BE CONSIDERED DURING PROPOSED WALL DESIGN

✳ DESIGN WALL FOR THESE VALUES

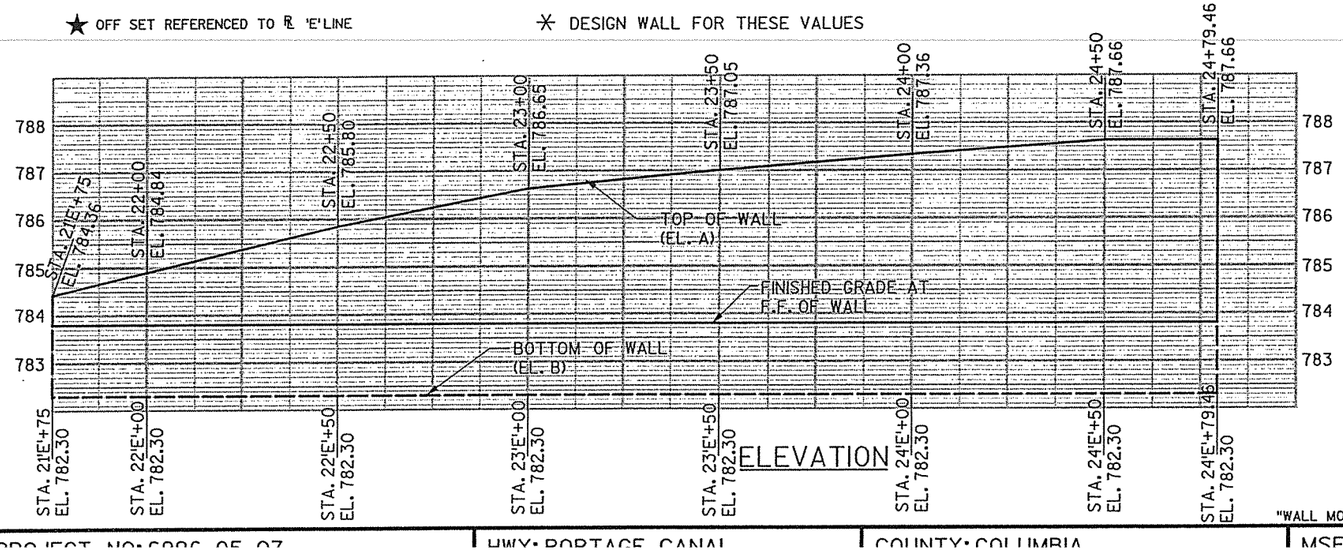

DESIGN DATA

THE CONTRACTOR SHALL PROVIDE COMPLETE DESIGN, PLANS, DETAILS, SPECIFICATONS AND SHOP DRAWINGS FOR THE RETAINING WALL. THE RETAINING WALL MANUFACTURER SHALL PROVIDE TECHNICAL ASSISTANCE TO THE CONTRACTOR DURING CONSTRUCTION. THE COST OF FURNISHING THESE ITEMS SHALL BE INCLUDED IN THE BID ITEM "WALL MODULAR BLOCK MECHANICALLY STABILIZED EARTH."

PLANS, ELEVATIONS AND DETAILS SHOWN ON THIS DRAWING ARE INTENDED TO INDICATE WALL LOCATIONS, LENGTHS, HEIGHTS AND DETAILS COMMON TO THE WALL SYSTEM SELECTED. THE CONTRACTOR SHALL VERIFY THAT THE WALL SYSTEM SELECTED WILL CONFORM TO THE REQUIRED ALIGNMENTS AND DETAILS.

THE RETAINING WALL IS TO BE DESIGNED USING THE ELEVATIONS GIVEN ON THIS SHEET.

DESIGN RETAINING WALL FOR A LIVE LOAD SURCHARGE OF 120 PSF

DESIGN FOR RETAINING WALL TO PROVIDE FOR PROPOSED GRADE SLOPED BEHIND WALL.

THE WALL COLOR SHALL BE TAN AND HAVE SPLIT FACE TEXTURE. (SIMILAR TO THE COLOR AND TEXTURE OF THE "SANDSTONE" BLOCK PRODUCED BY ROCKWOOD RETAINING WALLS).

PLANS SHALL NOT BE SCALED.

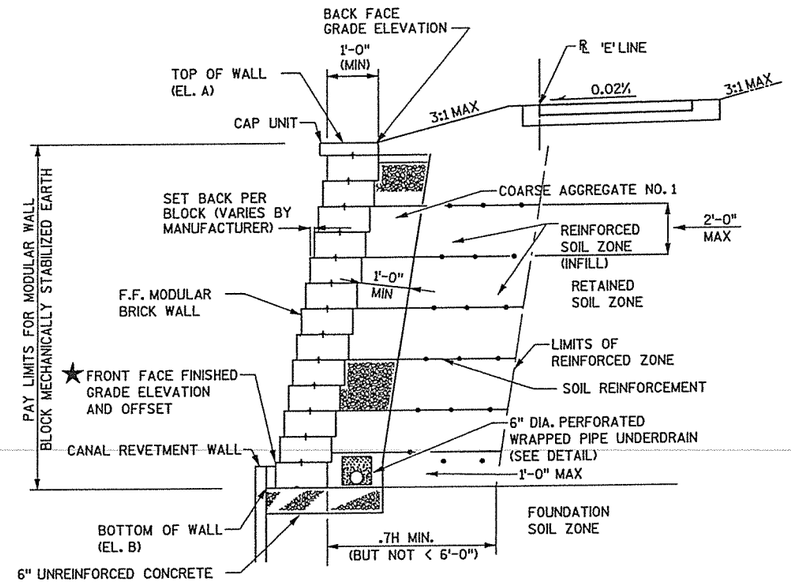

TYPICAL CROSS SECTION OF RETAINING WALL
(RAILING NOT SHOWN)

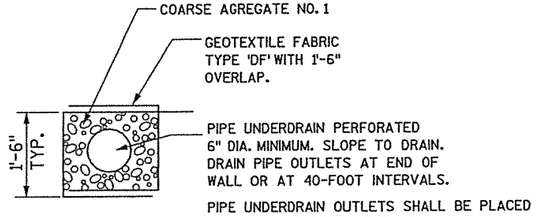

PIPE UNDERDRAIN DETAIL
COST INCIDENTAL TO THE BID ITEM "WALL MODULAR BLOCK MECHANICALLY STABILIZED EARTH"

PROJECT NO: 6986-05-07 | HWY: PORTAGE CANAL | COUNTY: COLUMBIA | MSE WALL | SHEET E

CLEARING AND GRUBBING — 201.0105 / 201.0205

CATEGORY	STATION		STATION	LOCATION	CLEARING (STA)	GRUBBING (STA)
020	7+00	-	8+00	LT & RT	2	2
020	8+00	-	9+00	RT	1	1
020	9+00	-	10+00	RT	1	1
020	10+00	-	11+00	RT	1	1
020	11+00	-	12+00	RT	1	1
				TOTAL	6	6

REMOVING MASONRY — 204.0185

CATEGORY	STATION	LOCATION	(CY)
020	5+75	LT	5
020	6+70	LT	1
020	16+11	LT	6
		TOTAL	12

CATEGORY	STATION		STATION	LOCATION	305.0110 BASE AGGREGATE DENSE 3/4-INCH (TONS)	301.0100.S QMP BASE AGGREGATE (TONS)
020	10"A"+00	-	11"A"+14	Trail Entrance	100	100
020	5"C"+15	-	17"C"+35	Trail LT	1040	1040
020	7+00	-	8+78	Conc. Walkway L	55	55
020	7+00	-	8+78	Conc. Walkway R	50	50
020	18"E"+45	-	25"E"+00	Trail RT	500	500
020	5+00	-	25+00	Roof Underdral	45	45
				TOTAL	1790	1790

EXCAVATION MARSH (DREDGING) — 205.0400

CATEGORY	STATION	END AREA	CANAL WIDTH (FT)	VOLUME (CY)
010	5+00	0	34.67	0
010	5+50	0	34.67	0
010	6+00	0	34.67	0
010	6+50	0	34.67	0
010	7+00	0	34.67	0
010	7+50	22.78	34.67	40
010	8+00	21.37	34.67	55
010	8+50	38.93	34.67	65
010	9+00	118.84	44.67	160
010	9+50	115.93	44.67	220
010	10+00	100.15	44.67	200
010	10+50	104.42	44.67	190
010	11+00	98.42	44.67	190
010	11+50	98.62	44.67	190
010	11+96	61.7	45.67	160
010	12+00	61.49	45.67	130
			TOTAL	1600

FINISHING ROADWAY — 213.0100

CATEGORY	STATION	LOCATION	(EACH)
020	5+00 - 25+00	Trail LT/RT	1
		TOTAL	1

BREAKER RUN — 311.0110

CATEGORY	LOCATION	(TON)
010	TEMPORARY ACCESS ROADS	100
020	TEMPORARY ACCESS ROADS	100
	TOTAL	200

EXCAVATION COMMON — 205.0100

CATEGORY	STATION	to STATION	TOTAL CUT VOLUME (CY)	Expanded Volume (CY)
020	5+15	5+50	102.72	123
020	5+50	6+00	73.87	89
020	6+00	6+50	22.87	27
020	6+50	7+00	380.81	457
020	7+00	7+50	332.45	399
020	7+50	8+00	108.95	131
020	8+00	8+50	136.89	164
020	8+50	9+00	134.25	161
020	9+00	9+50	142.88	170
020	9+50	10+00	155.93	187
020	10+00	10+50	161.59	194
020	10+50	11+00	171.72	206
020	11+00	11+50	173.69	208
020	11+50	12+00	163.04	196
020	12+00	12+50	152.70	183
020	12+50	13+00	153.58	184
020	13+00	13+50	169.68	204
020	13+50	14+00	177.54	213
020	14+00	14+50	179.74	215
020	14+50	15+00	130.96	157
020	15+00	15+50	70.89	85
020	15+50	16+00	98.06	118
020	16+00	16+50	66.92	80
020	16+50	17+00	46.30	56
020	17+92	18+00	0	0
020	18+00	18+50	0	0
020	18+50	19+00	21.33	26
020	19+00	19+50	90.70	109
020	19+50	20+00	140.79	169
020	20+00	20+50	147.06	176
020	20+50	21+00	148.39	178
020	21+00	21+50	139.43	167
020	21+50	22+00	111.89	134
020	22+00	22+50	77.22	93
020	22+50	23+00	93.11	112
020	23+00	23+50	111.45	134
020	23+50	24+00	88.29	105
020	24+00	24+50	90.62	109
020	24+50	25+00	115.02	138
020	10'A'+00	11'A'+14	27.09	33
		TOTAL		5890

ASPHALTIC SURFACE — 465.0105

CATEGORY	STATION		STATION	LOCATION	(TON)
020	10"A"+00	-	11"A"+00	Trail	25
020	5"C"+15	-	17"C"+34	Trail LT	225
020	18"E"+45	-	25"E"+00	Trail RT	100
				TOTAL	350

SELECT CRUSHED MATERIAL — 312.0110

CATEGORY	STATION		STATION	LOCATION	(TONS)
010	7+00	-	24+80	Revetment Wall Backfill	3800
				TOTAL	3800

MANHOLES TYPE 3 — 611.0210

CATEGORY	STATION	LOCATION	(EACH)
020	18+50	LEFT	1
		TOTAL	1

MANHOLE COVERS TYPE J — 611.0530

CATEGORY	STATION	LOCATION	(EACH)
020	18+50	LEFT	1
		TOTAL	1

MOBILIZATION — 619.1000

CATEGORY	STATION		STATION	(EACH)
010	5+00	-	25+00	0.65
020	5+00	-	25+00	0.23
			TOTAL	0.88

CONCRETE STEPS — 602.1500

CATEGORY	STATION	LOCATION	(SF)
020	12"C"+25	LEFT	5
		TOTAL	5

INLET COVERS TYPE MS — 611.0642

CATEGORY	STATION	LOCATION	(EACH)
020	8"B"+74	RIGHT	1
		TOTAL	1

CULVERT PIPE CORRUGATED STEEL 18-INCH — 521.0118

CATEGORY	STATION	LOCATION	(L.F.)
020	20+51	LT	20
		TOTAL	20

CULVERT PIPE REINFORCED CONCRETE — 522.0148

CATEGORY	STATION	LOCATION	CULVERT PIPE REINFORCED CONCRETE CLASS III 48-INCH (LF)
020	8+87	LT	5
		TOTAL	5

WALL MODULAR BLOCK MECHANICALLY STABILIZED EARTH — 532.0300.S

CATEGORY	STATION		STATION	BID ITEM	LOCATION	TOTAL (SF)
020	14'C'+50	-	17'C'+07	532.0300.S.01	STRUCTURE R-11-23	1425
020	18'E'+61	-	20'E'+50	532.0300.S.02	STRUCTURE R-11-24	1115
020	21'E'+75	-	24'E'+80	532.0300.S.03	RT	1300
						3840

WALL MODULAR BLOCK GRAVITY — 532.0200.S

CATEGORY	STATION		STATION	LOCATION	TOTAL (SF)
020	7'C'+00	-	9'C'+50	LT	475
020	10'C'+60	-	14'C'+75	LT	1455
					1930

RIPRAP MEDIUM — 606.0200

STATION	LOCATION	(CY)
8+90	LEFT	13
	TOTAL	13

INLET TYPE 8 — 611.0305

STATION	LOCATION	(EACH)
8'B' + 74	RIGHT	1
	TOTAL	1

GEOTEXTILE FABRIC TYPE R — 645.0130

CATEGORY	STATION	LOCATION	GEOTEXTILE FABRIC TYPE R (SY)
020	8"C"+90	LT	13
		TOTAL	13

CONCRETE SIDEWALK 4-INCH — 602.0405

CATEGORY	STATION		STATION	LOCATION	(SF)
020	7+00	-	8+78	Lock LT	890
020	7+00	-	8+78	Lock RT	890
				TOTAL	1780

CRACK AND DAMAGE SURVEY — 999.1500.S

CATEGORY	STATION		STATION	LOCATION	(L.S.)
010	5+00	-	25+00	24 Properties	1
				TOTAL	1

CULVERT PIPE CLASS III 15-INCH — 520.0115

CATEGORY	STATION	LOCATION	(LF)
020	8+74	RT	28
		TOTAL	28

CULVERT PIPE SALVAGED 30-INCH — 524.0130

CATEGORY	STATION	TO STATION	LOCATION	(LF)
020	18+55	18+80	LEFT	25
			TOTAL	25

CONCRETE BASES TYPE 6 — 654.0106

CATEGORY	STATION	LOCATION	(EA.)
020	5'C'+45	RT	1
020	6'C'+75	LT	1
020	8'C'+10	LT	1
020	9'C'+50	LT	1
020	10'C'+84	LT	1
020	12'C'+37	LT	1
020	13'C'+57	LT	1
020	14'C'+92	LT	1
020	16'C'+25	LT	1
020	17'C'+34	RT	1
020	18'E'+92	RT	1
020	20'E'+27	RT	1
020	21'E'+64	RT	1
020	22'E'+99	RT	1
020	24'E'+35	RT	1
		TOTAL	15

SIGNS

CATEGORY	SIGN NUMBER	STATION	SIGN CODE	SIGN MESSAGE	DIMENSIONS	637.0202 SIGNS REFLECTIVE TYPE II (SF)	634.0616 POSTS WOOD 4"x6"x16ft	634.0612 POSTS WOOD 4"x6"x12ft
020	1	Lock Street	W11-1	Warning Bikes	18"x18"	3.00	1	
020	2	5'F'+15 RT	D11-1	Bike Route	24"x18"	3.00		
020	3	5'F'+15 RT	R5-3	No Motor	24"x18"	3.00		1
020	4	5'F'+15 RT	W1-1L	Turn Warning	24"x24"	4.00		
020	5	5'F'+16 LT	D11-1	Bike Route	24"x18"	3.00		
020	6	5'F'+16 LT	MR4-6	End	24"x8"	1.33	1	
020	7	5'F'+16 LT	R1-1	Stop	24"x24"	4.00		1
020	8	6'C'+60 LT	W3-1	Stop Ahead	30"x30"	6.25		1
020	9	6'C'+60 LT	W1-1R	Turn Warning	24"x24"	4.00		1
020	10	15'C'+20 LT	W1-2R	Curve Warning	24"x24"	4.00		1
020	11	16'C'+80 RT	W3-1	Stop Ahead	30"x30"	6.25		1
020	12	16'C'+80 RT	W1-2L	Curve Warning	24"x24"	4.00		1
020	13	17'C'+25 RT	R1-1	Stop	24"x24"	4.00		1
020	14	17'C'+25 RT	R9-3b	Use Crosswalk	18"x12"	1.50		
020	15	17'C'+30 RT	D11-1	Bike Route	24"x18"	3.00	1	
020	16	17'C'+30 RT	R5-3	No Motor	24"x18"	3.00		
020	17	17+50, 75'RT	W11-1	Warning Bikes	18"x18"	2.25	1	
020	18	18+50, 75'RT	W11-1	Warning Bikes	18"x18"	2.25	1	
020	19	18'E'+55 LT	D11-1	Bike Route	24"x18"	3.00	1	
020	20	18'E'+55 LT	R5-3	No Motor	24"x18"	3.00		
020	21	18'E'+60 RT	R9-3b	Use Crosswalk	18"x12"	1.50		
020	22	18'E'+60 RT	R1-1	Stop	24"x24"	4.00		1
020	23	19'E'+75 RT	W3-1	Stop Ahead	30"x30"	6.25		1
020	24	23'E'+75 RT	W3-1	Stop Ahead	30"x30"	6.25		1
020	25	24'E'+90 RT	MR4-6	End	24"x8"	1.33	1	
020	21	24'E'+90 RT	D11-1	Bike Route	24"x18"	3.00		
020	22	24'E'+90 RT	R1-1	Stop	24"x24"	4.00		1
020	23	24'E'+95 RT	R5-3	No Motor	24"x18"	3.00	1	
020	24	24'E'+95 RT	D11-1	Bike Route	24"x18"	3.00		
020	25	25'E'+00, 70'LT	W11-1	Warning Bikes	18"x18"	2.25	1	
020	21	10'A'+10 RT	D11-1	Bike Route	24"x18"	3.00		
020	22	10'A'+10 RT	W11-1	Warning Bikes	18"x18"	2.25	1	1
020	23	10'A'+10 RT	R5-3	No Motor	24"x18"	3.00	1	
020	24	10'A'+15 LT	R1-1	Stop	24"x24"	4.00		
				TOTAL		114.66	11	13

MOBILIZATIONS EMERGENCY EROSION CONTROL 628.1910

CATEGORY	STATION	-	STATION	LOCATION	(EACH)
020	5+00	-	25+00	Project	1
				TOTAL	1

CONDUIT RIGID NON-METALLIC SCHEDULE 40 2-INCH 652.0225

CATEGORY	STATION	LOCATION	(LF)
020	5'C'+15 - 17'C'+34	LT	1220
020	18'E'+45 - 24'E'+75	RT	630
	TOTAL		1850

MOBILIZATIONS EROSION CONTROL 628.1905

CATEGORY	STATION	-	STATION	LOCATION	(EACH)
020	5+00	-	25+00	Project	2
				TOTAL	2

SALVAGED GUARD FENCE STEEL BEAM 614.0555

CATEGORY	STATION	-	STATION	LOCATION	(LF)
020	8+62	-	8+86	Trail RT	24
				TOTAL	24

TOPSOIL, MULCHING 625.0500 627.0200

CATEGORY	STATION	-	STATION	LOCATION	SALVAGED TOPSOIL (SY)	MULCHING (SY)
020	5"C"+15	-	17"C"+34	Trail LT	640	640
020	18"E"+44	-	25"E"+00	Trail RT	375	375
				TOTAL	1015	1015

EROSION MAT URBAN CLASS I TYPE A 628.2006

CATEGORY	STATION	-	STATION	LOCATION	EROSION MAT URBAN CLASS I TYPE A (SY)
020	5+00	-	25+00	Undistributed	1000
				TOTAL	1000

EROSION CONTROL 628.6005 628.1504 628.1520

CATEGORY	STATION	-	STATION	LOCATION	TURBIDITY BARRIER (SY)	SILT FENCE (LF)	SILT FENCE MAINTENANCE (LF)
020	5+00	-	25+00	Undistributed	-	500	500
020	16+00	-	16+00	LT/RT	40	-	-
020	24+70	-	24+70	LT/RT	40	-	-
				TOTAL	80	500	500

FERTILIZER TYPE B 629.0210

CATEGORY	STATION	-	STATION	LOCATION	(CWT)
020	5"F"+15	-	6"F"+00	Trail Entrance	0.15
020	7+00	-	17+00	Trail RT	0.45
020	6"C"+00	-	17"C"+34	Trail LT	0.45
020	18"E"+44	-	24"E"+75	Trail RT	0.40
020	18+75	-	24+75	Trail LT	0.40
				TOTAL	2

FIELD OFFICE TYPE C 642.5200

CATEGORY	STATION	-	STATION	LOCATION	PROJECT (EACH)
010	5+00	-	25+00	Project	0.50
020	5+00	-	25+00	Project	0.50
				TOTAL	1

CONSTRUCTION STAKING 650.4000 650.4500 650.5000 650.6500

CATEGORY	STATION	-	STATION	LOCATION	BID ITEM	CONSTRUCTION STAKING STORM SEWER SYSTEM (EACH)	CONSTRUCTION STAKING SUBGRADE (LF)	CONSTRUCTION STAKING BASE (LF)	CONSTRUCTION STAKING STRUCTURE LAYOUT (STRUCTURE) (LS)
020	5"C"+15	-	17"C"+34	Trail LT	-	-	1180	1180	-
020	18"E"+45	-	25"E"+00	Trail RT	-	-	655	655	-
020	7'C'+00	-	9'C'+50	Ret. Wall	650.6500.01	-	-	-	1
020	10'C'+60	-	14'C'+75	Ret. Wall	650.6500.02	-	-	-	1
020	14'C'+50	-	17'C'+07	R-11-23	650.6500.03	-	-	-	1
020	18'E'+62	-	20'E'+50	R-11-24	650.6500.04	-	-	-	1
020	21'E'+75	-	24'E'+80	Ret. Wall	650.6500.05	-	-	-	1
010	7'C'+00	-	16'C'+01	R-11-26	650.6500.06	-	-	-	1
010	7'B'+00	-	16'B'+40	R-11-27	650.6500.07	-	-	-	1
010	18'D'+79	-	24'D'+80	R-11-28	650.6500.08	-	-	-	1
010	19'E'+12	-	24'E'+80	R-11-29	650.6500.09	-	-	-	1
020	8"B"+74	-	8"B"+74	Trail RT	-	1	-	-	-
020	8'C'+90	-	8'C'+90	Trail LT	-	1	-	-	-
020	*9'B'+28	-	11'B'+83	Trail LT	-	1	-	-	-
				TOTAL		3	1835	1835	9

*RIVERWOOD APARTMENT COMPLEX

SEEDING MIXTURE NO. 40 630.0140

CATEGORY	STATION	-	STATION	LOCATION	(LB)
020	5"F"+15	-	6"F"+00	Trail Entrance	1.0
020	7+00	-	17+00	Trail RT	9.0
020	6"C"+00	-	17"C"+34	Trail LT	10.0
020	18"E"+44	-	24"E"+75	Trail RT	7.0
020	18+75	-	24+75	Trail LT	5.0
				TOTAL	32

WATER 624.0100

CATEGORY	STATION	-	STATION	LOCATION	(MGAL)
020	7+00	-	8+78	Conc. Walkway	0.3
020	7+00	-	8+78	Conc. Walkway	0.3
020	5"C"+15	-	17"C"34	Trail LT	4.6
020	18"E"+45	-	25"E"+00	Trail RT	2.5
020	5+00	-	25+00	Roof Underdrain	0.3
020	5+00	-	25+00	Dust Control	15.0
020	5+00	-	25+00	Undistributed	7.0
				TOTAL	30

PAVEMENT MARKING EPOXY 4-INCH 646.0106

CATEGORY	STATION	-	STATION	LOCATION	(LF)
020	5"C"+15	-	17"C"+34	Trail LT	305
020	18"E"+45	-	25"E"+00	Trail RT	165
				TOTAL	470

3

TRAFFIC CONTROL

CATEGORY	STATION	-	STATION	LOCATION	643.0100 TRAFFIC CONTROL (PROJECT) (EACH)	643.0420 TRAFFIC CONTROL BARRICADES TYPE III (DAYS)	643.0705 TRAFFIC CONTROL WARNING LIGHTS TYPE A (DAYS)	643.0900 TRAFFIC CONTROL SIGNS (DAYS)
010	5+00	-	25+00	Project	0.50	0	0	0
020	5+00	-	25+00	Project	0.50	1050	900	1850
				TOTAL	1	1050	900	1850

REVETMENT WALL, R-11-26 SPV.0090.07

CATEGORY	STATION	TO STATION	LOCATION	(LF)
010	7'C'+00	- 16'C'+01	Rev. Wall	900
		TOTAL		900

REVETMENT WALL, R-11-27 SPV.0090.08

CATEGORY	STATION	TO STATION	LOCATION	(LF)
010	7'B'+00	- 16'B'+40	Rev. Wall	940
		TOTAL		940

REVETMENT WALL, R-11-28 SPV.0090.09

CATEGORY	STATION	TO STATION	LOCATION	(LF)
010	18'D'+79	- 24'D'+80	Rev. Wall	600
		TOTAL		600

REVETMENT WALL, R-11-29 SPV.0090.10

CATEGORY	STATION	TO STATION	LOCATION	(LF)
010	19'E'+12	- 24'E'+80	Rev. Wall	570
		TOTAL		570

PVC WYE 8x6-INCH SPV.0060.05

CATEGORY	STATION	LOCATION	(EA.)
020	9+27	RT	1
020	9+50	RT	1
020	9+73	RT	1
020	9+95	RT	1
020	10+17	RT	1
020	10+40	RT	1
020	10+65	RT	1
020	10+68	RT	1
020	10+88	RT	1
020	11+11	RT	1
020	10+68	RT	1
020	10+88	RT	1
020	11+11	RT	1
	TOTAL		13

PVC ROOF DRAIN 4-INCH SPV.0060.01

CATEGORY	STATION	LOCATION	(EA.)
020	12+40	RT	1
020	20+55	LT	1
020	21+20	LT	1
020	21+30	LT	1
020	21+35	LT	1
	TOTAL		5

ADJUSTING DECORATIVE RAILING SPV.0060.04

CATEGORY	STATION	LOCATION	(EA.)
020	25+00	LT	1
	TOTAL		1

PVC PIPE 10-INCH SPV.0090.04

CATEGORY	STATION	LOCATION	(L.F.)
020	12+12	LT	20
	TOTAL		20

SALVAGING STONES SPV.0105.01

CATEGORY	STATION	LOCATION	(L.S.)
020	6+10	Right	1
	TOTAL		1

PVC CROSS 8x8-INCH SPV.0060.06

CATEGORY	STATION	LOCATION	(EA.)
020	10+52	RT	1
	TOTAL		1

PVC REDUCER 8x6-INCH SPV.0060.07

CATEGORY	STATION	LOCATION	(EA.)
020	10+52	RT	3
	TOTAL		3

PVC PIPE 8-INCH SPV.0090.03

CATEGORY	STATION	TO STATION	LOCATION	(L.F.)
020	9+10	- 11+60	RT	170
020	19+90		LT	40
020	22+40		LT	15
		TOTAL		225

PVC PIPE 4-INCH SPV.0090.01

CATEGORY	STATION	LOCATION	(L.F.)
020	12+40	RT	25
020	20+55	LT	15
020	21+20	LT	15
020	21+30	LT	15
020	21+35	LT	15
	TOTAL		85

PVC PIPE 6-INCH SPV.0090.02

CATEGORY	STATION	LOCATION	(L.F.)
020	9+16	RT	15
020	9+39	RT	15
020	9+61	RT	15
020	9+84	RT	15
020	10+06	RT	15
020	10+29	RT	15
020	10+52	RT	10
020	10+75	RT	15
020	10+77	RT	15
020	10+97	RT	15
020	11+20	RT	15
020	11+43	RT	15
020	11+66	RT	15
020	11+88	RT	15
020	19+60	RT	27
020	20+05	RT	25
020	20+75	RT	25
020	21+60	RT	29
020	21+90	RT	17
020	23+05	RT	17
020	23+40	RT	20
	TOTAL		340

PVC END CAP 8-INCH SPV.0060.08

CATEGORY	STATION	LOCATION	(EA.)
020	9+26	RT	1
020	11+81	RT	1
	TOTAL		2

GEOTEXTILE FABRIC TYPE DF SCHEDULE C 645.0113

CATEGORY	STATION	-	STATION	LOCATION	(SY)
010	7+00	-	8+50	LT/RT	1100
010	8+50	-	8+80	LT/RT	110
010	8+80	-	16+00	LT/RT	4000
010	19+00	-	24+75	LT/RT	2050
			TOTAL		7260

PVC ROOF DRAIN 6-INCH SPV.0060.02

CATEGORY	STATION	LOCATION	(EA.)
020	9+16	RT	1
020	9+39	RT	1
020	9+61	RT	1
020	9+84	RT	1
020	10+06	RT	1
020	10+29	RT	1
020	10+52	RT	1
020	10+75	RT	1
020	10+77	RT	1
020	10+97	RT	1
020	11+20	RT	1
020	11+43	RT	1
020	11+66	RT	1
020	11+88	RT	1
020	19+60	RT	1
020	20+05	RT	1
020	20+75	RT	1
020	21+60	RT	1
020	21+90	RT	1
020	23+05	RT	1
020	23+40	RT	1
	TOTAL		21

PVC ROOF DRAIN 8-INCH SPV.0060.03

CATEGORY	STATION	LOCATION	(EA.)
020	19+90	LT	2
020	22+40	LT	1
	TOTAL		3

SALVAGING 15-INCH CMP SPV.0105.02

CATEGORY	STATION	LOCATION	(L.S.)
020	20+51	LT	1
	TOTAL		1

CANAL RAILING SPV.0090.05

CATEGORY	STATION	-	STATION	LOCATION	(L.F.)
020	7'B'+00	-	9'B'+00	LT	200
020	7'C'+00	-	17'C'+15	RT	1015
020	18'E'+45	-	24'E'+90	LT	645
			TOTAL		1860

3

3

REMOVE LOCK DEBRIS — SPV.0105.03

STATION	-	STATION	LOCATION	(L.S.)
5+00	-	7+00	LOCK	1
			TOTAL	1

STRUCTURAL STEEL CARBON — 506.0105

STATION	-	STATION	LOCATION	(LB)
5+15	-	5+15	LOCK	12900
			TOTAL	12900

PAINTING LOCK AND LOCK GATES AND EQUIPMENT — SPV.0105.05

STATION	-	STATION	LOCATION	(L.S.)
5+00	-	7+00	LOCK	1
			TOTAL	1

REFURBISH LOCK GATES — SPV.0105.04

STATION	-	STATION	LOCATION	(L.S.)
5+15	-	5+15	LOCK	1
			TOTAL	1

CONCRETE SURFACE REPAIR — 509.1500

STATION	-	STATION	LOCATION	(SF.)
5+00	-	7+00	LOCK	1800
			TOTAL	1800

LOCK RAILING — SPV.0090.06

STATION	-	STATION	LOCATION	(L.F.)
4+50	-	7+00	RT & LT	540
			TOTAL	540

FENCE SAFETY — 615.0700.S

STATION	-	STATION	LOCATION	(LF)
5+00	-	7+00	RT & LT	400
			TOTAL	400

REMOVING FENCE — 204.0170

STATION	-	STATION	LOCATION	(L.F.)
5+00	-	7+00	RT & LT	550
			TOTAL	550

CONCRETE AGGREGATE SIZE NO. 2 — SPV.0035.01

STATION	-	STATION	LOCATION	(TON)
5+40	-	6+80	LOCK	450
			TOTAL	450

MOBILIZATION — 619.1000

STATION	-	STATION	(EACH)
5+00	-	7+00	0.12
		TOTAL	0.12

NEGATIVE PRESSURE CONTAINMENT AND COLLECTION OF WASTE MATERIALS (LOCK AND GATES) — 517.4500.S

STATION	-	STATION	LOCATION	(LS)
5+00	-	7+00	LOCK	1
			TOTAL	1

INSTALL LOCK EQUIPMENT — SPV.0105.06

STATION	-	STATION	LOCATION	(L.S.)
5+00	-	7+00	LOCK	1
			TOTAL	1

3

CONVENTIONAL SIGNS AND ABBREVIATIONS

STATE LINE
COUNTY LINE
TOWNSHIP AND RANGE LINES
SECTION LINE
QUARTER LINE
SIXTEENTH LINE
NEW REFERENCE LINE
NEW R/W LINE
EXISTING R/W LINE
PROPERTY LINE — P.L.
CORPORATE LIMITS — NAME
LOT, TIE AND OTHER MINOR LINES
SLOPE INTERCEPTS
UNDERGROUND FACILITY (Communications, Electric, Etc.) — C (Type)
FENCE
TEMPORARY LIMITED EASEMENT
LIMITED HIGHWAY EASEMENT
BEAM GUARD
TRANSMISSION STRUCTURES (Line Optional)
RAIL LINE — (SMALL SCALE) (LARGE SCALE)

SECTION CORNER
NOTATION FOR COMBUSTABLE FLUIDS — CAUTION
NOTATION FOR HIGH VOLTAGE TRANSMISSION LINES — CAUTION
BRIDGE
STREAM OR RIVER — NAME
LAKE — NAME
CULVERT (Box, Pipe Or Cattle Pass) — (Type)
SIGN — / SIGN

FOUNDATION OR RUIN — FDN. TYPE
BUILDING
CEMETERY
R/W MONUMENT
NON-MONUMENTED R/W POINT
IRON PIN — I.P.
VALVE — GAS (TYPE)
MANHOLE, SEPTIC VENT, WELL, ETC. — M.H. (Type)
GAS PUMPS — G.P.
BUSHES
TREES (Deciduous) (Coniferous)
WOODS
ENCROACHING SIGN — E-1 / SIGN

	COMPENSABLE	NON-COMPENSABLE
ELECTRIC POLE		
TELEPHONE POLE		
PEDESTAL (Label Type - Communications, Electric)		

NO ACCESS (By Acquisition)
NO ACCESS (By Statutory Authority)
NO ACCESS (By Previous Project)

ACRES	AC.	ELECTRIC PEDESTAL	EP	PROPERTY LINE — PL
AHEAD	AH.	FOUNDATION	FDN.	RADIUS — R
ALUMINUM	ALUM.	GARAGE	G	REFERENCE LINE — ℞
AND OTHERS	ET AL	GAS VALVE	GV	RESTRICTED DEVELOPMENT EASEMENT — RDE
BACK	BK.	HOUSE	H	RIGHT OF WAY — R/W
BARN	B	HIGHWAY EASEMENT	HE	SECTION — SEC.
BLOCK	BLK.	LENGTH	L	SHED — S
BUILDING	BLDG.	LIMITED HIGHWAY EASEMENT	LHE	STATION — STA.
CENTERLINE	℄			SQUARE FEET — S.F.
CENTRAL ANGLE	Δ	LONG CHORD	LC	TANGENT — T
CERTIFIED SURVEY MAP	C.S.M.	LONG CHORD BEARING	LCB	TELEPHONE PEDESTAL — TP
COMMERCIAL	COMM.	MONUMENT	MON.	TEMPORARY LIMITED EASEMENT — T.L.E.
CONCRETE	CONC.	NORTHING (GROUND)	Y.	VOLUME — V.
CORNER	COR.	PAGE	P.	WALL — W
EASTING (GROUND)	X.	PARKER-KALON FASTENER	PK	
FEET	FT.			

BEGIN RELOCATION ORDER
STA. 0+00.00
986.78 FT. SOUTH OF AND 12.00 FT. WEST OF THE SOUTHWEST CORNER OF SECTION 5, T12N, R9E

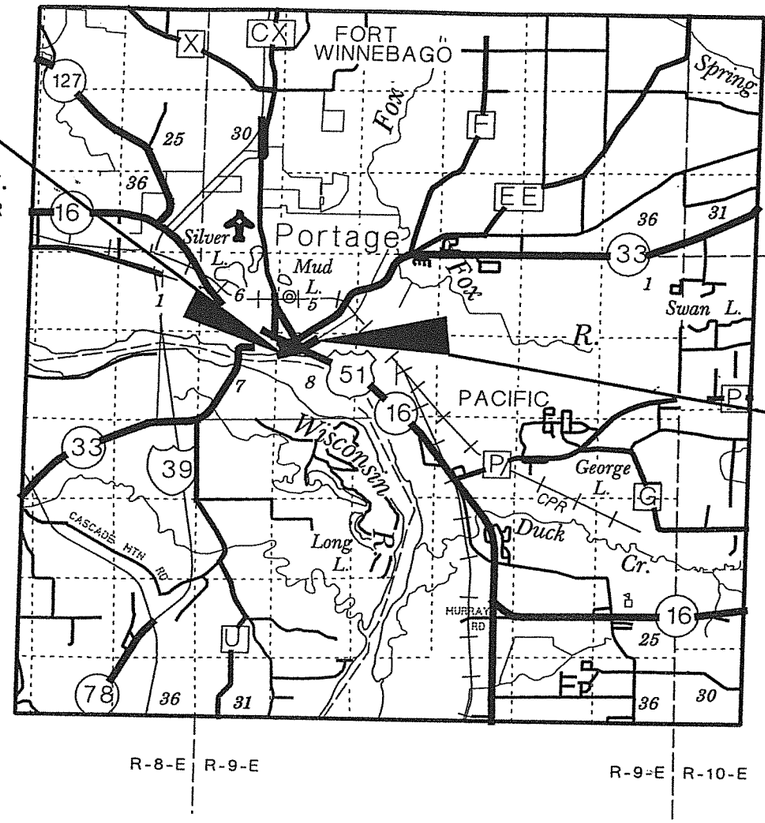

END RELOCATION ORDER
STA. 25+28.24
78.38 FT. SOUTH OF AND 2326.21 FT. EAST OF THE SOUTHWEST CORNER OF SECTION 5, T12N, R9E

NOTES:

DIMENSIONING FOR THE NEW R/W IS MEASURED ALONG AND PERPENDICULAR TO THE NEW REFERENCE LINES.

GOVERNMENTAL LAND LINE AND REFERENCE LINE ARE NOT COINCIDENTAL.

PROPERTY LINES SHOWN ON THIS PLAT ARE DRAWN FROM MAPS AND DOCUMENTS OF PUBLIC RECORD AND OR EXISTING OCCUPATION LINES. THIS PLAT MAY NOT BE A TRUE REPRESENTATION OF EXISTING PROPERTY LINES AND SHOULD NOT BE USED AS A SUBSTITUTE FOR AN ACCURATE FIELD SURVEY.

EXISTING HIGHWAY & CANAL RIGHT OF WAY SHOWN HEREIN IS BASED ON THE FOLLOWING POINTS OF REFERENCE : FIELD EVIDENCE OF ORIGINAL BULKHEAD WALLS, CERTIFIED SURVEY MAP 841, PLAT OF PORTAGE CITY & I.P.'s AS LOCATED IN THE FIELD.

COORDINATES AND BEARINGS ON THIS PLAT ARE ORIENTED TO THE WISCONSIN COUNTY COORDINATE SYSTEM, COLUMBIA COUNTY, NAD83(91). ALL PLAT DISTANCES ARE GROUND LENGTH.

RIGHT OF WAY MONUMENTS ARE TYPE 2 AND ARE PLACED PRIOR TO OR AT THE TIME OF LAND TITLE TRANSFER.

RIGHT OF WAY BOUNDARIES ARE DEFINED WITH COURSES OF THE PERIMETER OF THE HIGHWAY LANDS REFERENCED TO THE U.S. PUBLIC LAND SURVEY OR OTHER "SURVEYS OF PUBLIC RECORDS".

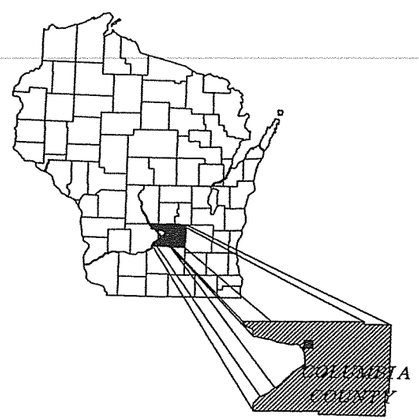

MONUMENTATION OF THE RIGHT-OF-WAY SHOWN ON THIS PLAT MAY BE DONE BY OTHERS. MEAD & HUNT, INC. AND THE SURVEYOR, DANIEL M. MURRAY, ASSUME NO RESPONSIBILITY FOR THE PLACEMENT OF SAID MONUMENTATION BY OTHERS.

PLAT PREPARED BY
MEAD & HUNT, INC.
CONSULTING ENGINEERS
MADISON, WISCONSIN

WISCONSIN — DANIEL M. MURRAY — S-1974 — MADISON WI — LAND SURVEYOR

Daniel Murray
7/20/2005

LAYOUT SCALE
0 1 2 3
MILES

TOTAL NET LENGTH OF CENTERLINE = 0.479 MI.

CITY OF PORTAGE
APPROVED:
DATE:

REVISION DATE:

PLAT OF RIGHT OF WAY REQUIRED FOR
WISCONSIN RIVER LOCK TO ADAMS ST.

HIGHWAY:	PORTAGE CANAL	R/W PROJECT NUMBER:	6996-05-06	SHEET NUMBER: 4.1
COUNTY:	COLUMBIA	FEDERAL PROJECT NUMBER:		TOTAL SHEETS: 7

E

FILE NAME : X:\16194-00\02001\TECH\cadd\drawings\plans\Right of Way\040101_rw.dgn
PLOT DATE : 7/22/2005
PLOT BY : Madison
PLOT NAME :
PLOT SCALE : 120000.00 " / IN.
WISDOT/CADDS SHEET 50

SCHEDULE OF LANDS & INTERESTS REQUIRED

PARCEL NUMBER	SHEET NUMBER (S)	OWNER (S)	INTEREST REQUIRED	TOTAL ACRES	R/W ACRES OR S.F. REQUIRED NEW	EXISTING	TOTAL	TOTAL ACRES REM.	HIGHWAY EASEMENT, T.L.E. ACRES OR S.F.
1	4.3-4.7	WISCONSIN DEPT. OF NATURAL RESOURCES	TLE	21.20	0.00	0.00	0.00	21.20	3.31
2	4.4	CECILE KAY PASKE	FEE,TLE	0.27	0.02	0.00	0.02	0.25	0.02
3	4.4	BONNIE K. GJAVENIS	FEE,TLE	0.12	0.01	0.00	0.01	0.11	0.01
4	4.4	JEROME M. BAGGOT	FEE,TLE	0.12	0.01	0.00	0.01	0.11	0.01
5	4.3-4.4	SHERRYLL K. STOLTE	FEE,TLE	0.18	0.01	0.00	0.01	0.17	0.01
6	4.4	MICHAEL L. & THERESA M. KUCHINSKI	FEE,TLE	0.16	0.01	0.00	0.01	0.15	0.01
7	4.4	GEORGE G. & JUDY A. COLLINS	FEE,TLE	0.14	0.01	0.00	0.01	0.13	0.01
8	4.4	ARLENE L. DAVEY	FEE,TLE	0.28	0.03	0.00	0.03	0.25	0.11
9	4.4-4.5	RIVERWOOD ELDERLY ASSOCIATES, LTD.	FEE,TLE	2.00	0.19	0.00	0.19	1.81	0.16
10	4.3-4.4	CITY OF PORTAGE	FEE,TLE	---	0.03	0.00	0.03	---	0.37
11	4.4-4.5	WILLIAM G. & SHARON E. GOETZ	FEE,TLE	0.19	0.01	0.00	0.01	0.18	0.05
12	4.5	STEVEN M. O'MALLEY	HIGHWAY EASEMENT,TLE	0.14	0.00	0.00	0.00	0.14	0.01 H.EASEMENT 0.01 TLE
13	4.5	CITY OF PORTAGE	FEE,TLE	0.33	0.01	0.00	0.01	0.32	0.02
14	4.5	MAURICE P. & NADINE D. SHAW	FEE	0.17	0.02	0.00	0.02	0.15	---
15									
16	4.5-4.6	FIRSTAR BANK - MADISON	FEE,TLE	0.82	0.04	0.00	0.04	0.78	0.07
17	4.5	STACY L. & CHAD A. DROSTE	FEE	0.17	0.02	0.00	0.02	0.15	---
18	4.5	ALONZO E. SR. & FRANCES M. RIDDLE	FEE	0.12	0.01	0.00	0.01	0.11	---
19	4.5	DOUGLAS E. KLAPPER	FEE	0.09	0.01	0.00	0.01	0.08	---
20									
21	4.5	TIMOTHY & LINDA HADDIX	FEE	0.10	0.01	0.00	0.01	0.09	---
22	4.5-4.6	CARDINAL CONTRACTORS, INC.	FEE,TLE, HIGHWAY EASEMENT	0.44	202 SF	0.00	202 SF	0.11	0.04
23									0.01
24					99 SF		99 SF		
25									
26	4.6		FEE	0.30	0.02	0.00	0.02	0.28	---
27	4.6-4.7	KENDAL OAKS OF WAUKESHA, LLC	FEE,TLE	1.54	0.06	0.00	0.06	1.48	0.18
28	4.6-4.7	BRITTINGHAM AND HIXON LUMBER CO.	FEE,TLE	0.91	0.03	0.00	0.03	0.88	377 SF.
29	4.7	DORN PROPERTIES	FEE	0.16	0.01	0.00	0.01	0.15	---
30									
31	4.7	THE McBURNEY CO., LLC	FEE	0.16	0.01	0.00	0.01	0.15	---
32	4.7	CANAL SEED & FEED, INC.	TLE	0.31	0.00	0.00	0.00	0.31	0.02
33									
34	4.4-4.6	CITY OF PORTAGE	TEMPORARY RELEASE OF RIGHTS						
35	4.6	ALLIANT ENERGY	TEMPORARY RELEASE OF RIGHTS						
36									
37									
38									
39									
40									
41									
42									
43									
44									
45									
46									
47									
48									
49									
50									
51									
52									
53									
54									
55									
56									
57									
58									
59									
60									
61									
62									
63									
64									
65									
66									
67									
68									

AREAS SHOWN IN THE TOTAL ACRES COLUMN MAY BE APPROXIMATE AND ARE DERIVED FROM TAX ROLLS OR OTHER AVAILABLE SOURCES AND MAY NOT INCLUDE LANDS OF THE OWNER WHICH ARE NOT CONTIGUOUS TO THE AREA TO BE ACQUIRED.

REVISION DATE:

DATE: 9-15-2005

COUNTY: COLUMBIA

HIGHWAY: PORTAGE CANAL

R/W PROJECT NUMBER: 6996-05-06

FEDERAL PROJECT NUMBER:

SHEET NUMBER: 4.2

E

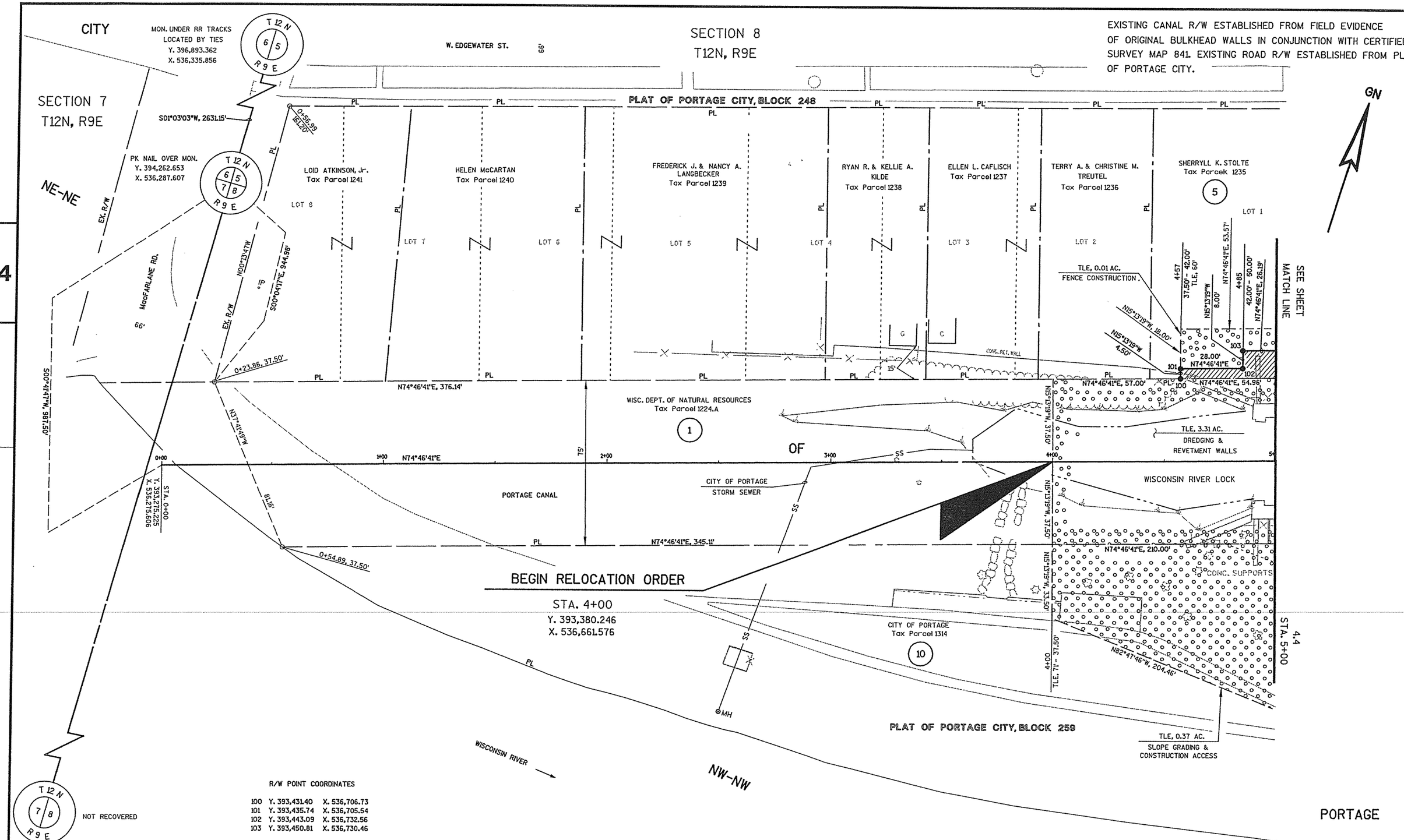

REVISION DATE	DATE 9-15-2005	SCALE, FEET 0 40	HWY: PORTAGE CANAL	STATE R/W PROJECT NUMBER 6996-05-06	PLAT SHEET 4.3	
	GRID FACTOR N/A		COUNTY: COLUMBIA	CONSTRUCTION PROJECT NUMBER 6996-05-07	PS&E SHEET	E

FILE NAME : X:\16194-00\02001\TECH\cadd\drawings\plans\Right of Way\040103_rw.dgn PLOT DATE : 10/31/2005 PLOT BY : Madison PLOT NAME : PLOT SCALE : 480.000 ' / FT.

CITY

MON. UNDER RR TRACKS
LOCATED BY TIES
Y. 396,893.362
X. 536,335.856

T 12 N
6 5
R 9 E

W. EDGEWATER ST.

SECTION 8
T12N, R9E

EXISTING CANAL R/W ESTABLISHED FROM FIELD EVIDENCE OF ORIGINAL BULKHEAD WALLS IN CONJUNCTION WITH CERTIFIED SURVEY MAP 841. EXISTING ROAD R/W ESTABLISHED FROM PLAT OF PORTAGE CITY.

PLAT OF PORTAGE CITY BLOCK 248

PLAT OF PORTAGE CITY, BLOCK 247

S01°03'03"W, 2631.15'

5+104.51
156.33'
EX. R/W

PK NAIL OVER MON.
Y. 394,262.653
X. 536,287.607

5 SHERRYLL K. STOLTE
Tax Parcel 1235

TLE, 0.01 AC.
FENCE CONSTRUCTION

5+70.65
157.90'

CECILE KAY PASKE
Tax Parcel 1224
2

BONNIE K. GJAVENIS
Tax Parcel 1225
3

JEROME M. BAGGOT
Tax Parcel 1226
4

MICHAEL L. & THERESA M. KUCHINSKI
Tax Parcel 1227
6

GEORGE G. & JUDY A. COLLINS
Tax Parcel 1228
7

8+82.66
TLE, 155.89'

23.53'
N75°08'47"E

9+06.19
TLE, 155.74'

ARLENE L. DAVEY
Tax Parcel 1229
8

WILLIAM G. & SHARON E. GOETZ
Tax Parcel 1230
11

N18°45'00"W

9' PRIVATE EASEMENT

LOT 1 | LOT 2 | LOT 3 | LOT 4 | LOT 5 | LOT 6 | LOT 7 | LOT 5

EX. R/W

LOCK ST.
66'

S34°00'38"E, 951.86'

TLE, 0.02 AC.
SLOPE GRADING

TLE, 0.01 AC.
SLOPE GRADING

TLE, 0.01 AC.
SLOPE GRADING

TLE, 0.01 AC.
SLOPE GRADING

TLE, 23 SF
SLOPE GRADING

TLE, 0.01 AC.
SLOPE GRADING

8+82.21
TLE, 86.62'

N41°00'12"W, 40.50'

9+06
TLE, 78'

TLE, 0.11 AC.
SLOPE GRADING & CONSTRUCTION ACCESS
BLDG. NOT AFFECTED

TLE, 0.05 AC.
SLOPE GRADING & CONSTRUCTION ACCESS

COMM. BLDG.

LOT 6 | LOT 7 | LOT 5

MATCH LINE SEE SHEET 4

S28°47'20"E, 976.89'
TO STA. 5+00

N74°46'41"E, 53.57'

5+10.57
TLE, 80'

S18°45'00"E, 10.02'

S18°45'00"E, 7.51'

5+76.95
TLE 58'

S18°45'00"E, 11.02'

5+77.41
48.50'

N74°46'41"E, 173.05'

SLOPE INTERCEPT

7+50
TLE, 56'

N77°04'07"E, 150.12'

N75°30'49"E
272.61'

N74°46'41"E, 592.52'

N76°53'57"E, 270.19'

5+11.19
50.00'

S18°45'00"E
12.52'

N74°46'41"E
26.19'

104
105
106
107
108
109

5+78.09
37.50'

N74°46'41"E
66.13'

HIST. SIGN

CONC. SUPPORTS

ENCROACHMENT
PIER

RET. WALL

N74°46'41"E
54.96'

5+11.96
37.50'

S38°16'20"E

VENT | VENT | VENT

34 CITY OF PORTAGE
STORM SEWER & MH

OF

WISCONSIN RIVER LOCK

6+00 | 7+00 | N74°46'41"E | 8+00 | 9+00 | 10+00

75'

TLE, 3.31 AC.
DREDGING & REVETMENT WALLS

PORTAGE CANAL

WISC. DEPT. OF NATURAL RESOURCES
Tax Parcel 1224.A
1

TLE, 0.07 AC.
SLOPE GRADING & CONSTRUCTION ACCESS

VENT | VENT | VENT | CONC. SUPPORTS | CONC. WALL

N74°46'41"E, 210.00'

110

N74°46'41"E, 564.11'

EX. CONC. FLUME

115

N75°08'54"E, 224.48'

N75°56'27"E, 271.06'

113

114

N65°01'48"E, 50.12'

9+50
44.00'

N74°40'27"E, 558.11'

6+29
41.00'

6+33
TLE, 55'

SLOPE INTERCEPT

9+00
52.50'

6'

LOT 6 | LOT 7 | LOT 5 | LOT 4 | LOT 3

VACATED

SIDEWALK

APARTMENT BLDG.

TLE, 0.09 AC.
ROOF DRAIN RECONSTRUCTION

RIVERWOOD ELDERLY ASSOCIATES, LTD.
Tax Parcel 1243
9

PARKING LOT

WISCONSIN RIVER FLOOD CONTROL LEVEE BOUNDARY

EX. R/W

PLAT OF PORTAGE CITY, BLOCK 249

W. MULLETT ST.

STA. 5+00
4.3

PLAT OF PORTAGE CITY, BLOCK 250

LOT 7

CITY OF PORTAGE
Tax Parcel 1314
10

S15°13'19"E
44.00'

S15°19'27"E
56.14'

N14°02'27"W, 97.02'

6+33
TLE, 99'

6+27
144.00'

6+37
TLE, 99'

5+89
TLE 149'

5+99
140.00'

N82°54'29"E
28.26'

N81°54'11"E
48.37'

N82°47'46"W, 204.46'

TLE, 0.37 AC.
SLOPE GRADING & CONSTRUCTION ACCESS

111
112

VACATED

CITY OF PORTAGE
10

LOT 8 | LOT 5

VACATED WATER ST.

NW-NW

W 99.27
132.96'

4.5
STA. 10+50

SEE SHEET MATCH LINE

4

GN

R/W POINT COORDINATES

104	Y. 393,457.69	X. 536,755.73	110	Y. 393,399.20	X. 536,874.05
105	Y. 393,445.83	X. 536,759.76	111	Y. 393,297.41	X. 536,890.35
106	Y. 393,463.19	X. 536,823.56	112	Y. 393,300.90	X. 536,918.42
107	Y. 393,473.63	X. 536,820.02	113	Y. 393,395.02	X. 536,894.88
108	Y. 393,541.82	X. 537,083.97	114	Y. 393,460.87	X. 537,157.81
109	Y. 393,559.77	X. 537,130.90	115	Y. 393,482.20	X. 537,203.83

PORTAGE

REVISION DATE	DATE 9-15-2005	SCALE, FEET 0 40	HWY: PORTAGE CANAL	STATE R/W PROJECT NUMBER 6996-05-06	PLAT SHEET 4.4	
	GRID FACTOR N/A		COUNTY: COLUMBIA	CONSTRUCTION PROJECT NUMBER 6996-05-07	PS&E SHEET	E

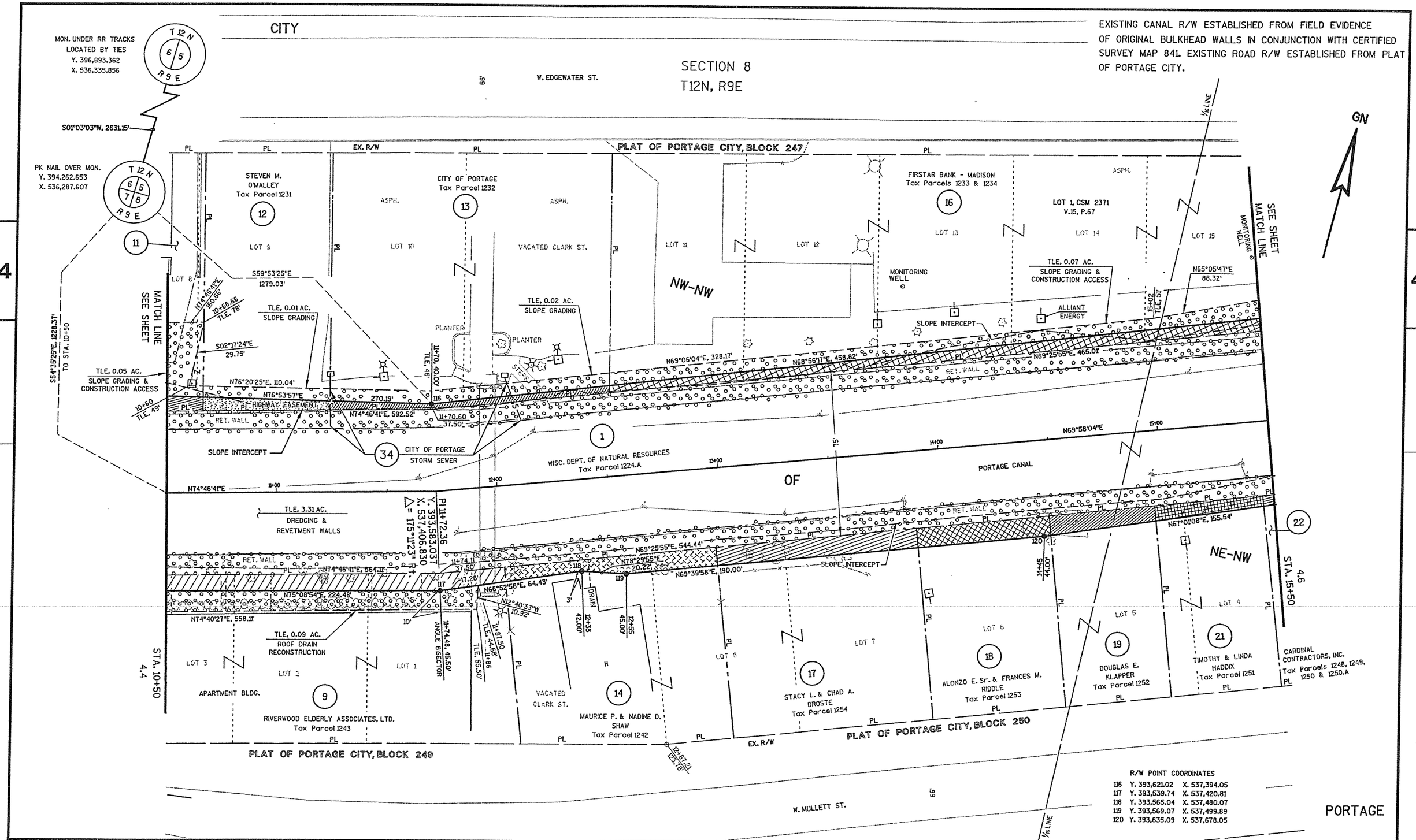

EXISTING CANAL R/W ESTABLISHED FROM FIELD EVIDENCE OF ORIGINAL BULKHEAD WALLS IN CONJUNCTION WITH CERTIFIED SURVEY MAP 841. EXISTING ROAD R/W ESTABLISHED FROM PLAT OF PORTAGE CITY.

R/W POINT COORDINATES

116	Y. 393,621.02	X. 537,394.05
117	Y. 393,539.74	X. 537,420.81
118	Y. 393,565.04	X. 537,480.07
119	Y. 393,569.07	X. 537,499.89
120	Y. 393,635.09	X. 537,678.05

REVISION DATE	DATE 9-15-2005	SCALE, FEET 0 40	HWY: PORTAGE CANAL	STATE R/W PROJECT NUMBER 6996-05-06	PLAT SHEET 4.5	
	GRID FACTOR N/A		COUNTY: COLUMBIA	CONSTRUCTION PROJECT NUMBER 6996-05-07	PS&E SHEET	E

FILE NAME : X:\16194-00\02001\TECH\cadd\drawings\plans\Right of Way\040105_rw.dgn PLOT DATE : 10/31/2005 PLOT BY : Madison PLOT NAME : PLOT SCALE : 480.00 ' / FT.

EXISTING CANAL R/W ESTABLISHED FROM FIELD EVIDENCE OF ORIGINAL BULKHEAD WALLS IN CONJUNCTION WITH CERTIFIED SURVEY MAP 841. EXISTING ROAD R/W ESTABLISHED FROM PLAT OF PORTAGE CITY.

CITY

SECTION 8
T12N, R9E

MON. UNDER RR TRACKS
LOCATED BY TIES
Y. 396,893.362
X. 536,335.856

T 12 N
6 5
R 9 E

S76°47'01"E, 1770.87'
MON. TO R/W

S01°03'03"W, 2631.15'

PK NAIL OVER MON.
Y. 394,262.653
X. 536,287.607

T 12 N
6 5
7 8
R 9 E

PLAT OF PORTAGE CITY, BLOCK 246
EX. R/W

DOWNTOWN PORTAGE PROPERTIES, LLC.
Tax Parcel 1221

PLAT OF PORTAGE CITY BLOCK 247

W. WISCONSIN ST. / STH 16

66'

DeWITT ST. / USH 51

EX. R/W

PL

15+58.50
119.66'

LOT 1 CSM 2371

LOT 15

MATCH LINE
SEE SHEET
16

FIRSTAR BANK - MADISON
Tax Parcels
1233 & 1234

TLE, 0.07 AC.
SLOPE GRADING & CONSTRUCTION ACCESS

N69°03'18"W
26.26'

15+90
TLE, 58.50'

15+95
TLE, 84.28'

35

ALLIANT ENERGY

SLOPE INTERCEPT

S65°55'13"E
151.68'

16+32.58
48.00'

S65°55'13"E
9.25'

16+39.14
41.50'

N68°56'17"E, 458.82'

N69°25'55"E
465.01'

121
122

N69°25'55"E, 197.73'

SLOPE INTERCEPT

34
CITY OF PORTAGE
STORM SEWER & MH

34
CITY OF PORTAGE
STORM SEWERS

N69°58'04"E

15+00

Y. 393,729.526
X. 537,808.602
Δ = 179°11'23"

PI 16+00.00

17+00

N69°25'55"E

18+00

S65°55'13"E
110.99'

17+15.07
33.50'

S65°55'13"E
5.69'

N69°25'55"E, 544.44'

HIGHWAY EASEMENT

N67°01'08"E, 155.54'

15+69
TLE, 37.61'

23.03'

16+00
36.00'

16+55
36.00'

123
124
125
126

1'

N69°25'55"E, 55.00'

N69°25'55"E, 129.55'

17+19.12
31.50'

N70°46'20"E
64.13'

17+49.15
67.16'

17+50.07
121.33'

COMM. BLDG.

SLOPE INTERCEPT

LOT 4
LOT 3
LOT 2
LOT 1

22
CARDINAL CONTRACTORS, INC.
Tax Parcels 1248, 1249
1250 & 1250.A

PLAT OF PORTAGE CITY, BLOCK 250
EX. R/W

W. MULLETT ST.

99'

TLE, 0.04 AC.
CONSTRUCTION ACCESS

STA. 15+50
4.5

S66°46'56"E, 1668.57'

S69°31'45"E, 1573.38'
TO STA. 15+50

15+69
TLE, 121.37'

N69°30'08"E
23.00'

15+92
TLE, 121.19'

S20°15'08"W, 80.19'

GN

E. EDGEWATER ST.

PLAT OF PORTAGE CITY, BLOCK 253
EX. R/W
PL

STEVEN E. & TERI A. WHALEY
Tax Parcel 1294

26

LOT 1 CSM 1569
V.7, P.119

LOT 6
LOT 5

18+11.53
134.86'

18+43.78
70.46'

18+44.67
45.00'

CONC. RET. WALL

SLOPE INTERCEPT

N34°14'01"W, 7.49'

18+44.93
37.52'

N59°57'54"E, 91.39'

128
127

18+45.03, 37.50'
EX. R/W P.I.

N69°25'55"E
0.10'
R/W MON. TO P.I.

WISC. DEPT. OF NATURAL RESOURCES
Tax Parcel 1224.A

1

BRITTINGHAM AND HIXON LUMBER CO.
Tax Parcel 372

28

LOT 4
LOT 3

SEE SHEET
MATCH LINE

19+36
41.50'

N57°46'13"E
39.00'

19+75
41.50'

N55°20'12"E
25.04'

20+50
43.00'
39.50'

S32°13'47"E
3.50'

SLOPE INTERCEPT

20+00
43.00'

N57°46'13"E, 50.00'

130
131
132
133

N57°46'13"E, 588.97'

PORTAGE CANAL

20+00

N57°46'13"E

TLE, 3.31 AC.
REVETMENT WALLS

Y. 393,807.312
X. 538,015.900
Δ = 168°20'18" R+

PI 18+21.41

18+41.55
37.50'

S34°14'01"E
2.27'

18+37.37, 37.50'
EX. R/W P.I.

18+47.64
39.76'

134
135
136
137

N49°08'51"E, 46.69'

18+95
41.50'

N57°46'13"E
10.19'

18+48.84
54.30'

CURVE
CURVE 2

S34°14'01"E
75.01'

N57°46'13"E, 322.44'

N56°26'54"E, 260.07'

N57°01'23"E, 230.02'

CONC. RUSH DRAIN

SLOPE INTERCEPT

TLE, 0.18 AC.
SLOPE GRADING & CONSTRUCTION ACCESS
BLDG. NOT AFFECTED

16+45
TLE 53'

COMM. BLDG.

LOT 2
LOT 1

GRAV. LOT

LOT 4
LOT 3

LOT 1, CSM 1113
V.5, P.105

KENDAL OAKS OF WAUKESHA, LLC
Tax Parcel 305

27

18+67.02
108.05'

S62°10'12"E, 36.00'

N02°35'02"E, 105.08'

18+84.99
139.24

BERNEICE KILLORAN
Tax Parcel 1297

PLAT OF PORTAGE CITY
BLOCK 254

EX. R/W

E. WISCONSIN ST.

E. MULLETT ST.

PORTAGE

4.7
STA. 20+50

CURVE 1
Δ = +05°49'02"
R = 145.68'
L = 14.79'
LC = 14.78'
LCB = N36°53'13"W

CURVE 2
Δ = +22°22'58"
R = 145.68'
L = 56.91'
LC = 56.55'
LCB = N50°59'13"W

R/W POINT COORDINATES

121	Y. 393,785.90	X. 537,822.22	130	Y. 393,924.33	X. 538,123.69
122	Y. 393,782.13	X. 537,830.66	131	Y. 393,938.96	X. 538,144.02
123	Y. 393,695.82	X. 537,821.25	132	Y. 393,965.60	X. 538,186.33
124	Y. 393,715.14	X. 537,872.74	133	Y. 393,962.64	X. 538,188.20
125	Y. 393,736.26	X. 537,933.30	134	Y. 393,789.53	X. 538,058.02
126	Y. 393,738.58	X. 537,928.10	135	Y. 393,787.66	X. 538,059.29
127	Y. 393,851.63	X. 538,015.88	136	Y. 393,775.84	X. 538,068.17
128	Y. 393,857.78	X. 538,011.58	137	Y. 393,806.38	X. 538,103.48
129	Y. 393,903.53	X. 538,090.70			

REVISION DATE	DATE 9-15-2005	SCALE, FEET 0 40	HWY: PORTAGE CANAL	STATE R/W PROJECT NUMBER 6996-05-06	PLAT SHEET 4.6	
	GRID FACTOR N/A		COUNTY: COLUMBIA	CONSTRUCTION PROJECT NUMBER 6996-05-07	PS&E SHEET	E

SECTION 8
T12N, R9E

EXISTING CANAL R/W ESTABLISHED FROM FIELD EVIDENCE OF ORIGINAL BULKHEAD WALLS IN CONJUNCTION WITH CERTIFIED SURVEY MAP 841. EXISTING ROAD R/W ESTABLISHED FROM PLAT OF PORTAGE CITY.

CITY

MON. UNDER RR TRACKS
LOCATED BY TIES
Y. 396,893.362
X. 536,335.856

T 12 N
6 5
R 9 E

S01°03'03"W, 2631.15'

PK NAIL OVER MON.
Y. 394,262.653
X. 536,287.607

T 12 N
6 5
7 8
R 9 E

S80°09'23"E, 1950.37'
TO STA. 20+50

S81°01'47"E, 1924.13'

MATCH LINE
SEE SHEET
4.6
STA. 20+50

E. EDGEWATER ST.

66'

PLAT OF PORTAGE CITY, BLOCK 253

EX. R/W

PL

PLAT OF PORTAGE CITY, BLOCK 162

BRITTINGHAM AND HIXON LUMBER CO.
Tax Parcel 372
28

VACATED MAIN ST.

DORN PROPERTIES
Tax Parcel 371
29

THE McBURNEY Co., LLC
Tax Parcel 370
31

JOHN GRUBER
Tax Parcel 369

GARY &
MARY SMITH

ADAMS ST.
66'

EX. R/W

LOT 1
LOT 2
LOT 3
LOT 4
LOT 5
LOT 8

24+95.46
152.73'

LOT 3
N57°46'13"E, 20.00'
20+50
TLE 50'
20+10
TLE 38.66'-50'
TLE, 197 SQ.FT.
CULVERT PIPE &
ROOF DRAIN
RECONSTRUCTION
N32°13'47"W, 7.00'
20+50
39.50'-43.00'
S32°13'47"E
3.50'
20.00'
N32°13'47"W, 10.34'
132
133
159.00'
N57°19'22"E, 384.01'

COMM. BLDG.

TLE, 180 SQ.FT.
CULVERT PIPE
RECONSTRUCTION
22+29
TLE 40.90'-50'
22+49
TLE 41.05'-50'
N57°46'13"E, 20.00'
N32°13'47"W, 9.10'
20.00'
N32°13'47"W, 8.95'
SLOPE INTERCEPT
0.6'
N57°46'13"E, 588.97'

VERIZON
ALLIANT
ENERGY
WALL
BIT.
XTP
XEP

24+34
42.50'-37.50'
S32°13'47"E
5.00'
WOOD FENCE &
CONC. RET. WALL
24+95.29
37.50'
138
139
140
N57°46'13"E, 61.29'
N32°08'51"W, 7.00'
25+00

WISC. DEPT. OF NATURAL RESOURCES
Tax Parcel 1224.A
1

OF

PORTAGE CANAL

75'

21+00
22+00
N57°46'13"E
23+00
24+00

TLE, 3.31 AC.
REVETMENT WALLS

ENCROACHMENT
BLDG. OVERHANG

ENCROACHMENT
AIR EXCHANGER

ENCROACHMENT
WALL

RET. WALL

24+95.19
37.50'
MH
SS
SIGN

N57°46'13"E, 322.44'
N56°26'54"E, 260.07'
N57°01'23"E
230.02'
141
142
ROOF
DRAIN
N57°46'13"E, 325.19'
N57°46'13"E, 5.00'
N32°13'47"W, 12.50'
21+55
41.50'
N42°50'23"E
15.52'
21+70
37.50'
21+75
TLE 37.50'-50'
SLOPE INTERCEPT
N32°13'47"W, 2.00'
23+70
TLE 39.50'-37.50'
N59°27'18"E, 85.04'
125.19'
143
1'
N32°08'51"W
16.50'

TLE, 0.18 AC.
SLOPE GRADING
BLDG. NOT AFFECTED
HOWEVER IS ENCROACHING

COMM. BLDG.

TLE, 9 S.F.
SLOPE GRADING
BLDG. NOT AFFECTED
HOWEVER IS ENCROACHING

TLE, 0.02 AC.
SLOPE GRADING &
CONSTRUCTION ACCESS
BLDG. NOT AFFECTED

S32°13'47"E
7.00'
TLE, 42' - 49'
24+55
N64°52'00"E
40.47'
24+95.16
TLE, 54'

COMM. BLDG.

LOT 1
LOT 2
LOT 3
LOT 4
LOT 5
LOT 6
LOT 8

END RELOCATION ORDER
STA. 25+28.24
Y. 394,184.275
X. 538,613.819

VACATED MAIN ST.

27
KENDAL OAKS OF WAUKESHA, LLC
Tax Parcel 305

LOT 1, CSM 1113
V.5, P.105

NE-NW

32
CANAL SEED & FEED INC.
Tax Parcel 304

24+95.03
149.04'

EX. R/W

DORN
PROPERTIES

PLAT OF PORTAGE CITY
BLOCK 254

PLAT OF PORTAGE CITY, BLOCK 143

R/W POINT COORDINATES

132	Y. 393,965.60	X. 538,186.33
133	Y. 393,962.64	X. 538,188.20
138	Y. 394,159.97	X. 538,511.43
139	Y. 394,165.74	X. 538,514.10
140	Y. 394,198.43	X. 538,565.95
141	Y. 393,950.11	X. 538,320.22
142	Y. 393,961.50	X. 538,330.78
143	Y. 394,134.93	X. 538,605.86

E. MULLETT ST.

PORTAGE

REVISION DATE	DATE 9-15-2005	SCALE, FEET 0 40	HWY: PORTAGE CANAL	STATE R/W PROJECT NUMBER 6996-05-06	PLAT SHEET 4.7
	GRID FACTOR N/A		COUNTY: COLUMBIA	CONSTRUCTION PROJECT NUMBER 6996-05-07	PS&E SHEET E

FILE NAME : X:\16194-00\02001\TECH\cadd\drawings\plans\Right of Way\040107_rw.dgn
PLOT DATE : 10/31/2005 PLOT BY : Madison PLOT NAME : PLOT SCALE : 480.27 ' / FT.

ELLEN L. CAFLISCH
TERRY A. & CHRISTINE M. TREUTEL
SHERRYLL K. STOLTE
CECILE KAY PASKE
BONNIE K. GJAVENIS
JEROME M. BAGGOT
MICHAEL L. & THERESA M. KUCHINSKI
P.L.
CONC. RET. WALL
CONC. SUPPORTS
STEPS
TLE
PROPOSED R/W
RETAINING WALL
SIDEWALK
5'-10"
4'-10"
1'-2"
17'-4"
34'-10"
17'-6"
STA. 8+00
MATCH LINE
BM #1
BM #2
BM #3
BM #4
VENT
WEST LOCK GATE
WISCONSIN RIVER LOCK
EAST LOCK GATE
7+00
17.33', LT.
7+00
17.58', RT.
FLOW
N74°46'41"E
N 74°-46'-41" E
℄ CANAL
REVETMENT WALL FOR DETAILS SEE DETAIL SHEET
CONC. WALL
WISCONSIN RIVER
48" DIA. RCP
3+50
4+00
5+00
6+00
7+00
SS
BEGIN DREDGING
STA 5+10.00
SALVAGED STONES ON PALLETS FROM LOCK TENDER HOUSE
ASPHALT PARKING LOT
S
NOTES:
STATION OFFSETS ARE TO THE FRONT FACE OF THE REVETMENT WALL
EXISTING PATH
EXISTING 48" DIA. RCP
INV. EL. 780.4
EXISTING WATER EL. 782.4
PROPOSED WATER SURFACE EL. 781.8
PROPOSED TOP OF REVETMENT WALL EL. 798.8
FILL LOCK WITH CCONCRETE AGGREGATE SIZE NO. 2 TO EL. 778.3
PROPOSED ℄ CANAL BOTTOM EL. 778.3
EXISTING BOTTOM OF CANAL
EXISTING SEDIMENT
LOCK BOTTOM EL. 771.3
WISCONSIN RIVER LOCK
794
790
786
782
778
774
770
766
789.20
787.79
787.00
786.92
786.82
783.50
781.10
780.18
779.58
779.40
779.68
779.62
779.42
778.90
778.11
777.34
776.56
775.78
775.00
774.26
773.49
772.74
774.85
776.25
777.66
777.85
777.92
777.98
3+00
4+00
5+00
6+00
7+00
8+00
5
5

MICHAEL L. & THERESA M. KUCHINSKI

GEORGE G. & JUDY A. COLLINS

ARLENE L. DAVEY

WILLIAM G. & SHARON E. GOETZ

STEVEN M. O'MALLEY

CITY OF PORTAGE

CITY OF PORTAGE

FIRSTAR BANK - MADISON

WELL

MEDIUM RIPRAP REQ'D. FOR DETAILS SEE DETAIL SHEET

TO BE RELOCATED BY OTHERS

PROPOSED R/W

EXISTING R/W

GUY

BM 6

PLANTER

PLANTER

PLANTER

STEPS

EXISTING PATH

STA. 8+00

STA. 14+00

MATCH LINE

MATCH LINE

PIER

SIDEWALK

SIDEWALK

5'-0"

5'-0"

3'-0"

1'-2"

1'-2"

1'-2"

17'-4"

38'-10"

19'-4"

35'-0"

17'-6"

19'-6"

STA 8+80
17.33', LT.

STA 9+00
23.07', LT.
MEDIUM RIPRAP REQ'D.

REVETMENT WALL FOR DETAILS SEE DETAIL SHEET

EXISTING REVETMENT WALL TO BE REMOVED

9+00

10+00

11+00

12+00

13+00

N74°46'41"E

N74°46'41"E

N69°58'04"E

℄ CANAL

44'-11"

21'-5"

23'-6"

10" PVC OUTLET

STA 11+73.08
20.00', LT.

7" PVC OUTLET

45'-0"

12'-0"

24'-0"

EXISTING REVETMENT WALL TO BE REMOVED

STA 8+80
17.33', RT.

STA 9+00
21.91', RT.

EXISTING REVETMENT WALL TO BE REMOVED

PI 11+72.36

STA 11+71.43
25.15', RT.

REVETMENT WALL FOR DETAILS SEE DETAIL SHEET

EX. CONC. CURB

EXISTING R/W

ASPHALT PARKING LOT

SIDEWALK

TLE

PROPOSED R/W

EXISTING REVETMENT WALL TO BE REMOVED

GUY

ALONZO E. Sr. & FRANCES M. RIDDLE

STACY L. & CHAD A. DROSTE

MAURICE P. & NADINE D. SHAW

END DREDGING
STA 12+10.00

RIVERWOOD ELDERLY ASSOCIATES, LTD.

N

EXISTING PEDESTRAIN BRIDGE

TOP OF REVETMENT WALL EL. 789.8

TOP OF REVETMENT WALL EL. 786.8

48" STORM SEWER

12" OUTFALL

INV. 782.61

INV. 781.78

TOP OF REVETMENT WALL EL. 783.8

10" PVC OUTLET

7" PVC OUTLET

EXISTING WATER EL. 782.4

PROPOSED WATER SURFACE EL. 781.8

EXISTING BOTTOM OF CANAL

DREDGE CUT

PROPOSED ℄ CANAL BOTTOM EL. 778.3

794
790
786
782
778
774
770
766

777.98 778.05 778.11 780.122 780.95 781.26 781.36 781.19 781.03 780.87 780.63 780.47 780.53 780.47 780.42 780.37 780.33 780.28 780.24 779.81 779.54 779.46 779.38 779.29 779.21 779.10 778.96 778.82 778.68 778.54 778.46

8+00 9+00 10+00 11+00 12+00 13+00 14+00

PROJECT NO: 6996-05-07	HWY: PORTAGE CANAL	COUNTY: COLUMBIA	PLAN & ℄ PROFILE - PORTAGE CANAL DREDGING SHEET 2 OF 2	SHEET E

REMOVE TREE OR SHRUB

N

ELLEN L. CAFLISCH

TERRY A. & CHRISTINE M. TREUTEL

SHERRYLL K. STOLTE

CONSTRUCTION ACCESS FOR LOCK REHABLITATION

ASPHALT

LOCK ST.

9' PRIVATE EASEMENT

BEGIN CONSTRUCTION
STA 5'C'+15.95
Y = 393,476.436
X = 536,778.941

BONNIE K. GJAVENIS

CECILE KAY PASKE

JEROME M. BAGGOT

MICHAEL L. & THERESA M. KUCHINSKI

P.L.

PROPOSED R/W

TLE

REMOVE EXISTING STEPS

REMOVE CONCRETE SUPPORTS TO BOTTOM OF SUBGRADE. (PAID AS REMOVING MASONRY)

STA 5+53.5
48' LT, 15' R

PC

515.12'

CONC. SUPPORTS

R 'C' LINE

N74°46'42"E

6'C'+00

7'C'+00

10' TRAIL

2'

CANAL RAILING
N75°52'24"E

STA. 8+00

EXISTING R/W

REMOVE EXISTING FENCE

BM #3

BM #2

PI 5'C'+44.95

VENT

PT 5'C'+53.51

PI 6'C'+00

EAST LOCK GATE

BM #4

STA. 7'C'+00, RT.
BEGIN PAVED SHOULDER

MODULAR BLOCK WALL REQ'D
SEE DETAILS

5+00

WISCONSIN RIVER LOCK

6+00

7+00

N74°46'41"E

35'-0"

WEST LOCK GATE

R CANAL

REVETMENT WALL
SEE STRUCTURE PLANS R-11-27

REVETMENT WALL
SEE STRUCTURE PLANS R-11-26

MATCH LINE STA. 10"A"+75

BEGIN PROJECT
STA 5+00.00
Y = 393,406.504
X = 536,758.064

CANAL RAILING

CONC. WALL

7'B'+00

N73°46'32"E

R 'B' LINE

PI 11'A'+05.55

PI 6'B'+14.68

10"A"+00

R 'A' LINE

N 12°04'38" W

TLE

ASPHALT PARKING LOT

PROPOSED R/W

SLOPE INTERCEPT

MATCH LINE STA. 10"A"+75

BEGIN CONSTRUCTION
STA 10"A"+00.00
Y = 393,301.559
X = 536,899.467

EXISTING PATH

BM #1

REMOVE EXISTING FENCE

SS

'A' LINE BIKE TRAIL

'C' LINE BIKE TRAIL

STA 10"A"+00.00
EL 798.68

VPI STA 10"A"+12.00
VPI EL 798.63

-0.01 %

-2.38 %

-1.65 %

VPI STA 10"A"+95.55
VPI EL 796.64

STA 11"A"+09.85
EL 796.24

VPC STA 5'C'+15.95
VPC EL 791.70

+4.61 %

VPC STA 5'C'+95.00
VPC EL 795.55

K = 6.20
VCL 50.00'

VPI STA 6'C'+20.00
VPI EL 796.50

VPT STA 6'C'+45.00
VPT EL 795.64

-3.65 %

804
800
796
792
788
784
780
776

10"A"+00 11"A"+00 5'C'+20 6'C'+00 7'C'+00 8'C'+00

107.09 798.63
798.38 798.39
797.93 797.91
797.47 797.43
796.87 796.96
199.14 796.53
796.25 791.89
796.09 792.81
796.04 793.73
796.11 794.65
796.05 795.56
796.12 796.00
796.19 795.79
796.21 795.12
796.30 794.43
793.44 793.74
790.16 793.05
786.92 792.36
785.82 791.68
785.44 790.99
785.09 790.30

5

5

HWY: PORTAGE CANAL

COUNTY: COLUMBIA

PLAN AND PROFILE - BICYCLE / PEDESTRIAN TRAIL

SHEET E

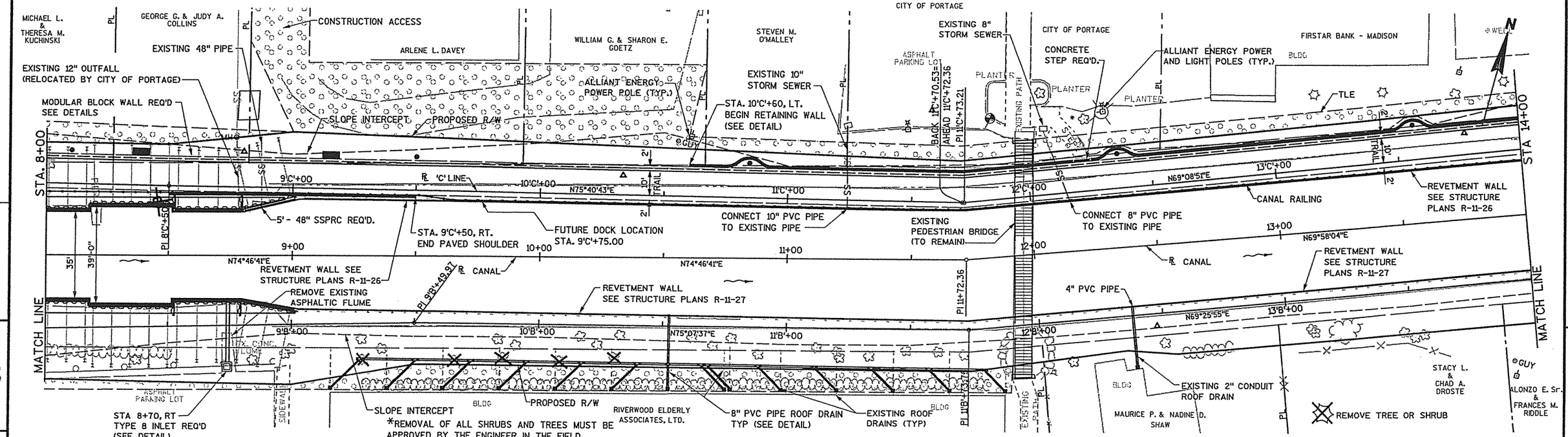

PROJECT NO: 6996-05-07	HWY: PORTAGE CANAL	COUNTY: COLUMBIA	PLAN AND PROFILE - BICYCLE / PEDESTRIAN TRAIL	SHEET E

FILE NAME : X:\16184-00\03001\TECH\eadd\Final Plans 2005\050103-pp.dgn

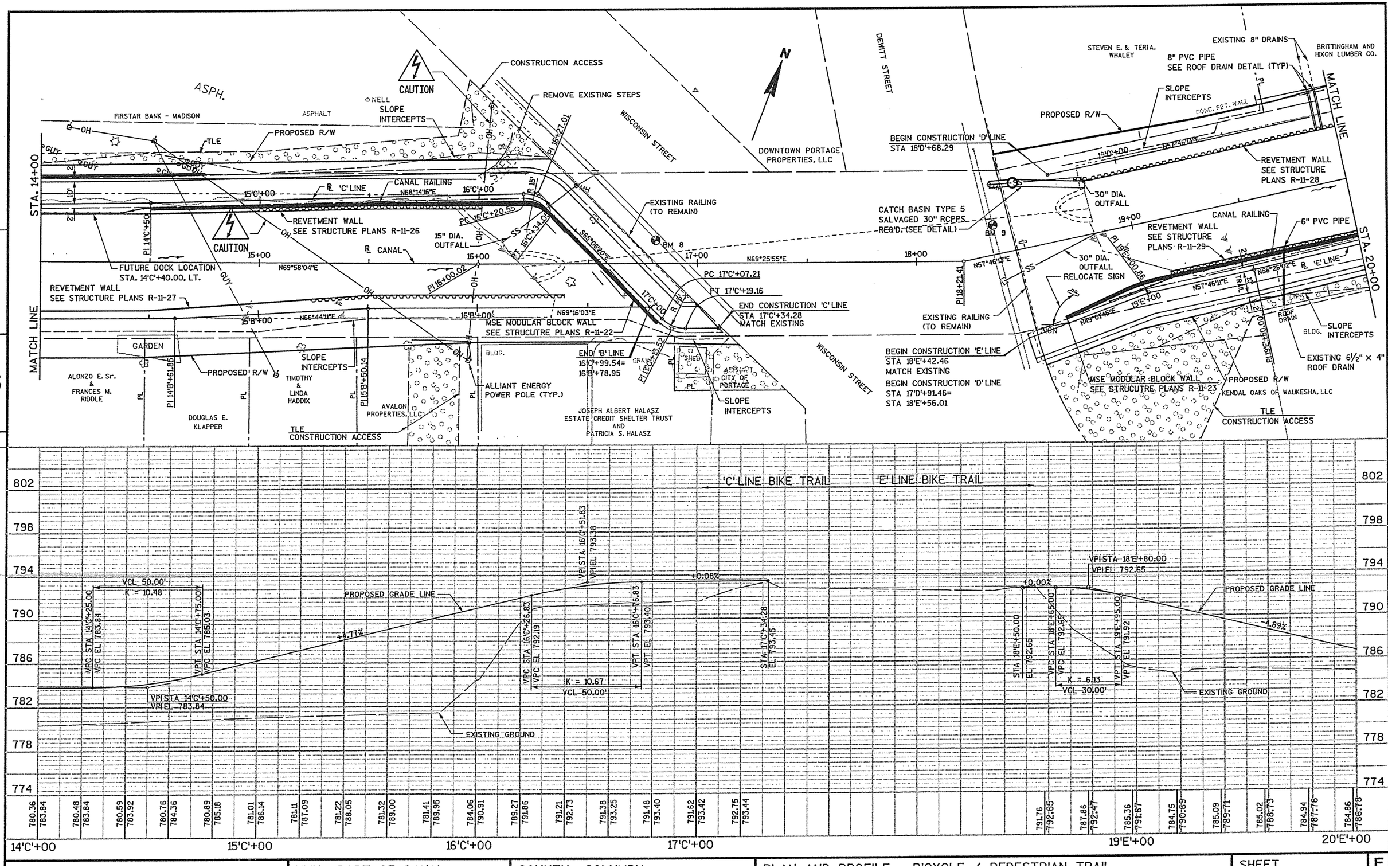

CONSTRUCTION ACCESS
REMOVE EXISTING STEPS
CAUTION
ASPH.
FIRSTAR BANK - MADISON
ASPHALT
WELL
SLOPE INTERCEPTS
PROPOSED R/W
TLE
STA. 14+00
MATCH LINE
CANAL RAILING
N68°14'16"E
15'C'+00
16'C'+00
℄ 'C' LINE
REVETMENT WALL SEE STRUCTURE PLANS R-11-26
15" DIA. OUTFALL
℄ CANAL
15+00
16+00
17+00
18+00
FUTURE DOCK LOCATION STA. 14'C'+40.00, LT.
N69°58'04"E
REVETMENT WALL SEE STRUCTURE PLANS R-11-27
15'B'+00
16'B'+00
N66°44'11"E
N69°16'03"E
MSE MODULAR BLOCK WALL SEE STRUCUTRE PLANS R-11-22
GARDEN
ALONZO E. Sr. & FRANCES M. RIDDLE
PROPOSED R/W
TIMOTHY & LINDA HADDIX
DOUGLAS E. KLAPPER
AVALON PROPERTIES, LLC
TLE CONSTRUCTION ACCESS
ALLIANT ENERGY POWER POLE (TYP.)
END 'B' LINE 16'C'+99.54= 16'B'+78.95
JOSEPH ALBERT HALASZ ESTATE CREDIT SHELTER TRUST AND PATRICIA S. HALASZ
CITY OF PORTAGE
SLOPE INTERCEPTS
WISCONSIN STREET
DEWITT STREET
DOWNTOWN PORTAGE PROPERTIES, LLC
EXISTING RAILING (TO REMAIN)
BM 8
PC 17'C'+07.21
PT 17'C'+19.16
END CONSTRUCTION 'C' LINE STA 17'C'+34.28 MATCH EXISTING
N69°25'55"E
N69°58'04"E
PI 16+00.02
PI 16+27.01
PI 14'C'+50
PI 14'B'+61.85
PI 15'B'+50.14
PI 17'C'+13.52
PI 18+21.41
N57°46'13"E
BEGIN CONSTRUCTION 'D' LINE STA 18'D'+68.29
CATCH BASIN TYPE 5 SALVAGED 30" RCPPS REQ'D. (SEE DETAIL)
BM 9
30" DIA. OUTFALL
RELOCATE SIGN
EXISTING RAILING (TO REMAIN)
BEGIN CONSTRUCTION 'E' LINE STA 18'E'+42.46 MATCH EXISTING
BEGIN CONSTRUCTION 'D' LINE STA 17'D'+91.46= STA 18'E'+56.01
STEVEN E. & TERIA. WHALEY
EXISTING 8" DRAINS
BRITTINGHAM AND HIXON LUMBER CO.
8" PVC PIPE SEE ROOF DRAIN DETAIL (TYP)
SLOPE INTERCEPTS
PROPOSED R/W
CONC. RET. WALL
19'D'+00
N57°46'13"E
REVETMENT WALL SEE STRUCTURE PLANS R-11-28
19+00
CANAL RAILING
6" PVC PIPE
REVETMENT WALL SEE STRUCTURE PLANS R-11-29
PI 19'E'+00.86
N57°46'11"E
N56°26'02"E
℄ 'E' LINE
19'E'+00
N49°01'46"E
ROOF DRAIN
SLOPE INTERCEPTS
EXISTING 6½" x 4" ROOF DRAIN
MSE MODULAR BLOCK WALL SEE STRUCUTRE PLANS R-11-23
PROPOSED R/W
KENDAL OAKS OF WAUKESHA, LLC
TLE CONSTRUCTION ACCESS
STA. 20+00
5
'C' LINE BIKE TRAIL
'E' LINE BIKE TRAIL
802
798
794
790
786
782
778
774
VCL 50.00'
K = 10.48
VPC STA 14'C'+25.00
VPC EL 783.84
VPT STA 14'C'+75.00
VPC EL 785.03
VPI STA 14'C'+50.00
VPI EL 783.84
PROPOSED GRADE LINE
+4.77%
VPI STA 16'C'+51.83
VPI EL 793.38
+0.08%
VPC STA 16'C'+26.83
VPC EL 792.19
K = 10.67
VCL 50.00'
VPT STA 16'C'+76.83
VPT EL 793.40
STA 17'C'+34.28
EL 793.45
EXISTING GROUND
+0.00%
VPI STA 18'E'+80.00
VPI EL 792.65
STA 18'E'+50.00
EL 792.65
VPC STA 18'E'+65.00
VPC EL 792.65
K = 6.13
VCL 30.00'
VPT STA 19'E'+95.00
VPT EL 791.92
-4.89%
780.36 783.84
780.48 783.84
780.59 783.92
780.76 784.36
780.89 785.18
781.01 786.14
781.11 787.09
781.22 788.05
781.32 789.00
781.41 789.95
784.06 790.91
789.27 791.86
791.21 792.73
791.38 793.25
791.48 793.40
791.62 793.42
792.75 793.44
791.76 792.65
787.86 792.47
785.36 791.67
784.75 790.69
785.09 789.71
785.02 788.73
784.94 787.76
784.86 786.78
14'C'+00
15'C'+00
16'C'+00
17'C'+00
19'E'+00
20'E'+00

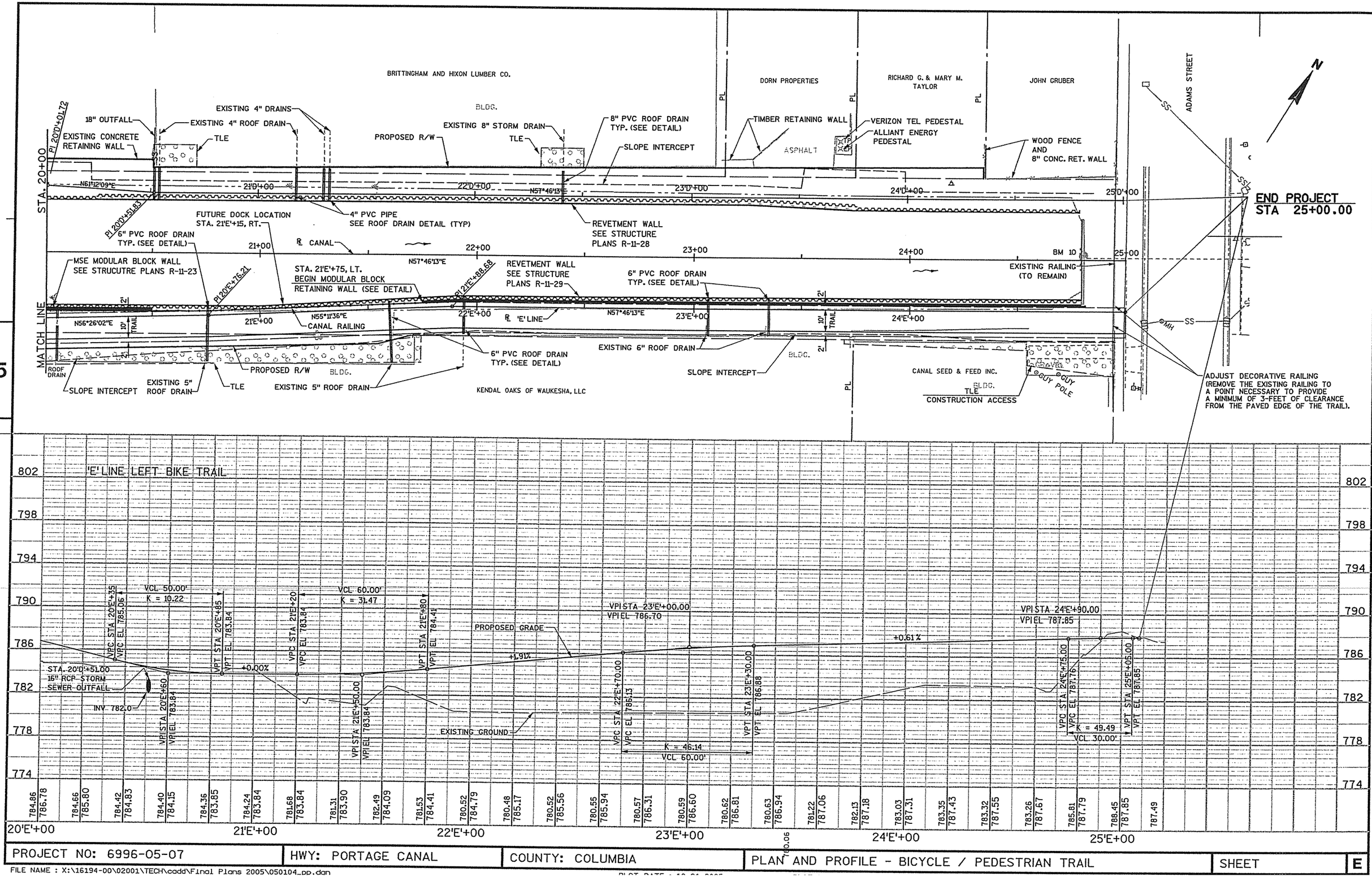

PROJECT NO: 6996-05-07	HWY: PORTAGE CANAL	COUNTY: COLUMBIA	PLAN AND PROFILE - BICYCLE / PEDESTRIAN TRAIL	SHEET	E

FILE NAME : X:\16194-00\02001\TECH\cadd\Final Plans 2005\050104_pp.dgn

PLOT DATE : 10-21-2005

DISTRICT CONTACT:

TYPE CODE = X

STATE PROJECT NUMBER	SHEET NO.
6996-05-07	8.

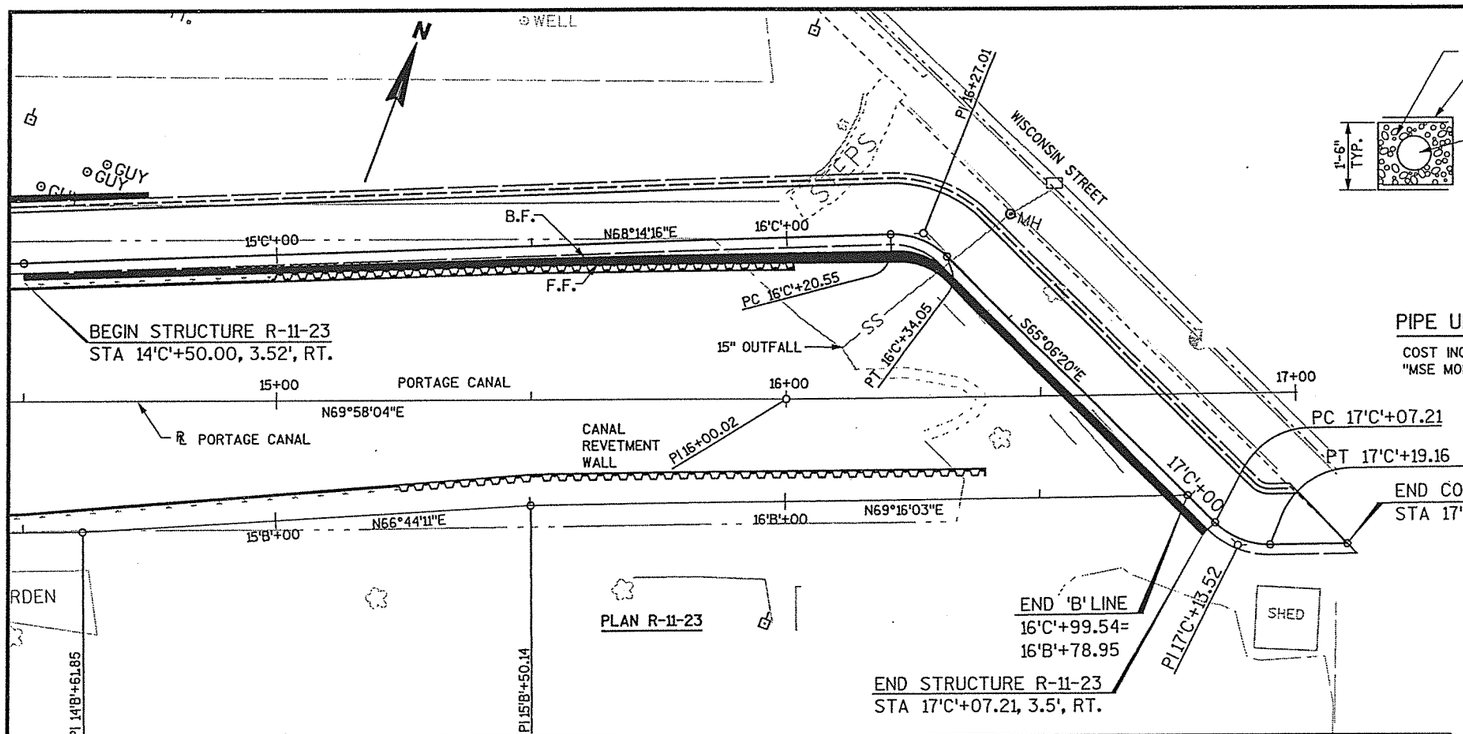

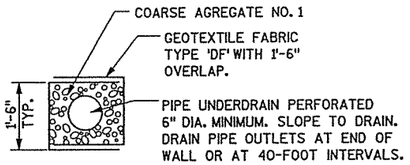

PIPE UNDERDRAIN DETAIL

COST INCIDENTAL TO THE BID ITEM "MSE MODULAR BLOCK WALL".

GENERAL NOTES

DRAWINGS SHALL NOT BE SCALED.

SAFETY FACTORS BASED ON REINFORCING LENGTH OF 6 FEET EXTENDING BEYOND THE BACK OF MODULAR BLOCK WALL.

F.F. - FRONT FACE
B.F. - BACK FACE

ALLOWABLE WALL SYSTEMS

1. MECHANICALLY STABILIZED EARTH MODULAR BLOCK WALL

LIST OF DRAWINGS

1. GENERAL PLAN
2. SUBSURFACE EXPLORATION

DESIGN DATA

THE CONTRACTOR SHALL PROVIDE COMPLETE DESIGN, PLANS, DETAILS, SPECIFICATIONS, AND SHOP DRAWINGS FOR THE RETAINING WALL IN ACCORDANCE WITH THE SPECIAL PROVISIONS. THE RETAINING WALL MANUFACTURER SHALL PROVIDE TECHNICAL ASSISTANCE TO THE CONTRACTOR DURING CONSTRUCTION. THE COST OF FURNISHING THESE ITEMS SHALL BE INCLUDED IN THE BID ITEM "MECHANICALLY STABILIZED EARTH MODULAR BLOCK WALL".

PLANS, ELEVATIONS, AND DETAILS SHOWN ON THESE DRAWINGS ARE INTENDED TO INDICATE THE WALL LOCATIONS, LENGTHS, HEIGHTS, AND DETAILS COMMON TO THE WALL SYSTEM SELECTED. THE CONTRACTOR SHALL VERIFY THAT THE WALL SYSTEM SELECTED WILL CONFORM TO THE REQUIRED ALIGNMENTS AND DETAILS.

THE RETAINING WALL IS TO BE DESIGNED USING THE ELEVATIONS GIVEN ON THIS SHEET.

DESIGN FOR RETAINING WALL TO PROVIDE FOR FINISHED GRADE SLOPED BEHIND WALL AS SHOWN.

SEE SPECIAL PROVISIONS FOR AESTHETIC TREATMENT OF WALL.

DESIGN RETAINING WALL FOR A LIVE LOAD SURCHARGE OF 240 PSF.

SEE CANAL CROSS SECTION SHEETS FOR EXCAVATION LIMITS.

SEE BORING LOG SHEET 2 FOR SUBGRADE PROPERTIES.

THE WALL COLOR SHALL BE TAN AND HAVE A SPLIT FACE TEXTURE, (SIMILAR TOTHE COLOR AND TEXTURE OF THE "SANDSTONE" BLOCK PRODUCED BY ROCKWOOD RETAINING WALLS.

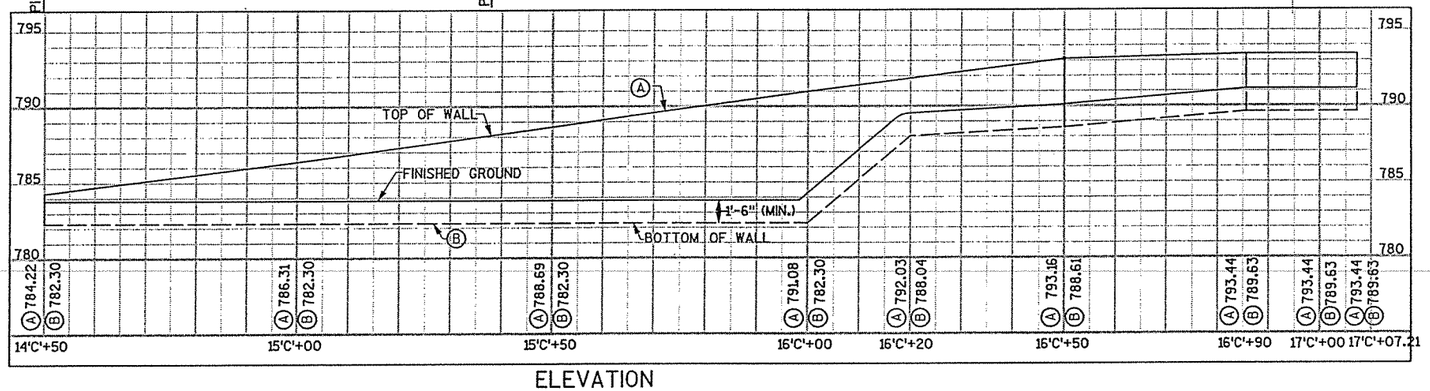

ELEVATION

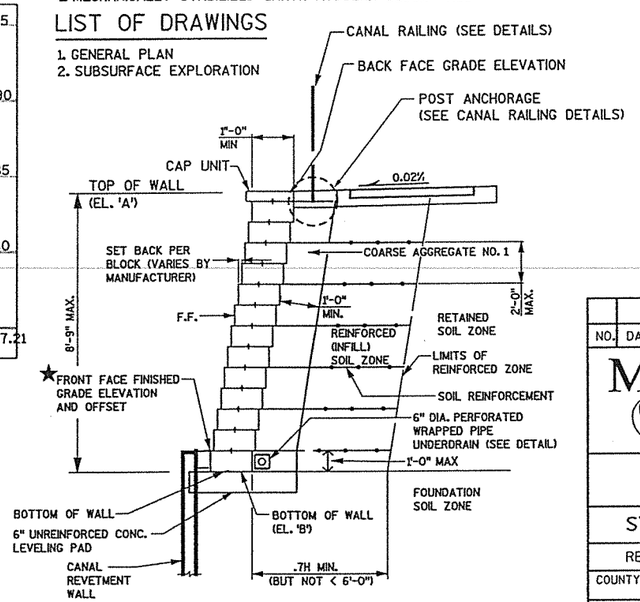

TYPICAL CROSS SECTION OF RETAINING WALL

SOIL PARAMETERS *

ELEVATION	SOIL DESCRIPTIONS	SOIL UNIT WEIGHT (pcf)	COHESION (psf)	ANGLE OF INTERNAL FRICTION (DEGREES)
EL. 790-783	RETAINED SOIL CONSISTING OF NEW FILL MATERIAL	120	0	30
EL. 783-780	NATIVE SILTY FINE SAND WITH SOME GRAVEL	118	0	29
EL. 780-778	NATIVE FINE TO MEDIUM SAND WITH GRAVEL	110	0	28
EL. 778-772	NATIVE FINE TO MEDIUM SAND WITH GRAVEL	112	0	31
EL. 772-759	NATIVE FINE TO MEDIUM SAND WITH GRAVEL	115	0	33
EL. 791-783.5	REINFORCED (INFILL) ZONE SOIL	120	0	30

GEOMETRY TABLE

STATION	★ OFFSET TO F.F. OF WALL	ELEV. A	ELEV. B
14'C'+50	3.52' RT.	784.22	782.30
15'C'+00	4.19' RT.	786.31	782.30
15'C'+50	4.13' RT.	788.69	782.30
16'C'+00	5.18' RT.	791.08	782.30
16'C'+20	3.86' RT.	792.03	788.04
16'C'+50	4.59' RT.	793.16	788.61
17'C'+02.22	4.37' RT.	793.44	789.63

★ OFFSET REFERENCED TO THE 'C' ℄

TOTAL ESTIMATED QUANTITIES

BID ITEM	UNIT	TOTAL
MECHANICALLY STABILIZED EARTH MODULAR BLOCK WALL	SF	1427

SAFETY FACTORS

MINIMUM REQUIRED DESIGN SAFETY FACTORS		R-11-23
SLIDING:	1.5	2.2
OVERTURNING:	2.0	5.1
GLOBAL STABILITY:	1.5	1.5
ULTIMATE BEARING CAPACITY:		5.3 KSF

WISCONSIN
GARY A. RUCHTI
E-30936
MADISON
WI
PROFESSIONAL ENGINEER

Gary Ruchti
10/21/05

NO.	DATE	REVISION	BY

MEAD & HUNT
ENGINEERS
ARCHITECTS
SCIENTISTS
PLANNERS

STATE OF WISCONSIN
DEPARTMENT OF TRANSPORTATION
DIVISION OF HIGHWAYS

STRUCTURE R-11-23

RETAINING WALL ALONG PORTAGE CANAL

COUNTY	~~TOWN/CITY/VILLAGE~~
COLUMBIA	PORTAGE

DESIGN SPEC.	LOAD	CONST. SPEC.
AASHTO 2004	N/A	2005

DESIGNED BY	DESIGN CK'D.	DRAWN BY	PLANS CK'D.
		WAK	JFR/GAR

BRIDGE OFFICE CONTACT
FINN HUBBARD, P.E.
(608) 266-8489

CONSULTANT CONTACT
GARY RUCHTI, P.E.

APPROVED
CHIEF STRUCTURAL DESIGN ENGINEER — DATE

GENERAL PLAN

SHEET 1 OF 2

DATE:

8

8

SCALE =

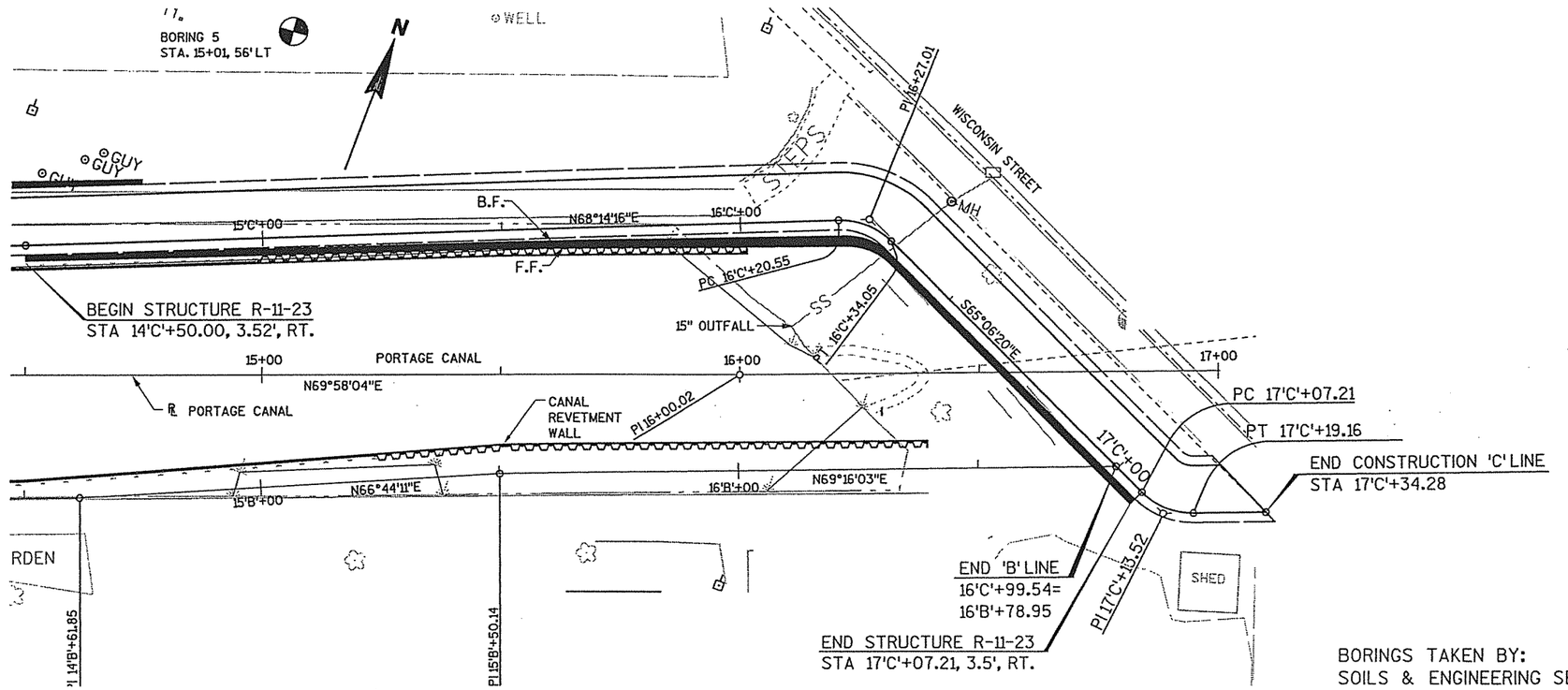

BORINGS TAKEN BY:
SOILS & ENGINEERING SERVICES, INC.
MADISON, WI
JULY 8, 2004

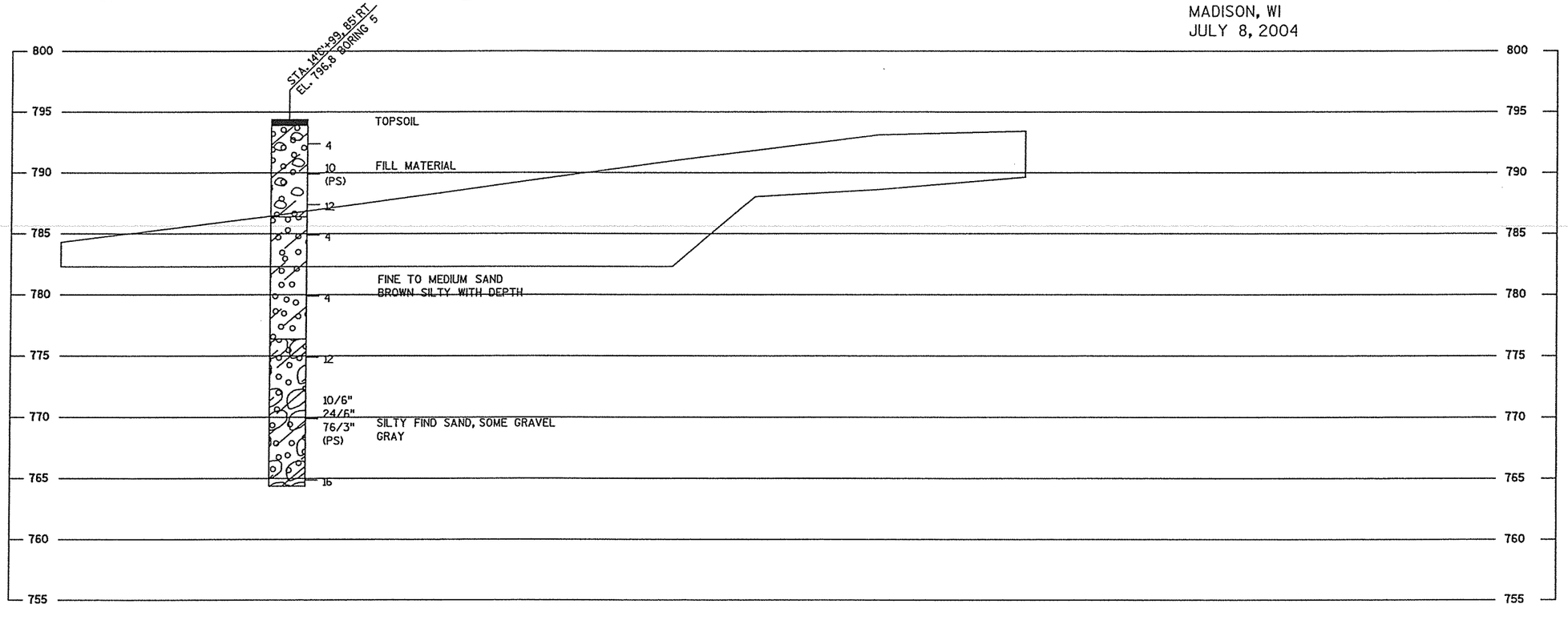

STATE PROJECT NUMBER	SHEET NO.
6996-05-07	8.

ABBREVIATIONS

F—FINE M—MEDIUM C—COARSE
WS—WEATHERED SO—SOUND

MATERIAL SYMBOLS

TOPSOIL, SILT, SANDSTONE
SAND, PEAT, LIMESTONE
GRAVEL, CLAY, IGNEOUS ROCK

LEGEND OF PROBING

PROBING NO.
STA.
ELEVATION
95/6=95 BLOWS FOR 6" PENETRATION
PROBING TAKEN WITH A 350#WT. FALLING 18" ON A 2" O.D. POINT.
7 AVERAGE BLOWS PER FOOT
REFUSAL 95/6

LEGEND OF BORING

BORING NO.
ELEV.
STA.
UNCONFINED STRENGTH → 7.7 7
BLOWS PER FT. USING 140# WT. FALLING 30"
WASH SAMPLE
SANDY GRAVEL
F.
BOULDERS OR COBBLES
SAND
SHELBY TUBE—S.T.
GROUND WATER ELEVATION
NO GROUND WATER OBSERVED ABOVE THIS ELEVATION
SILTY CLAY
SO
LIMESTONE

UNLESS OTHERWISE SPECIFIED, THE BLOWS PER FOOT AT THE LOCATIONS INDICATED ARE BASED ON DRIVING A O.D.X1.4" I.D. SPLIT SPOON SAMPLER WITH A 140# HAMMER HAVING A FREE FALL OF 30". THE BLOW COUNT IS TAKEN IN UNDISTURBED SOIL IMMEDIATELY BELOW A CASED OR OPEN HOLE ELIMINATING SIDE FRICTION ON THE DRIVE PIPE.

SUBSURFACE EXPLORATION FOR FOUNDATION DESIGN AND BIDDERS INFORMATION

TO OBTAIN RELATIVE DATA CONCERNING THE CHARACTER OF MATERIAL IN AND UPON WHICH THE FOUNDATION MIGHT BE BUILT, BORINGS AND/OR SOUNDINGS WERE MADE AT POINTS APPROXIMATELY AS INDICATED ON THIS DRAWING. THE DATA PRESENTED HEREIN REPRESENTS THE FINDINGS OF THE SUBSURFACE EXPLORATIONS MADE. HOWEVER, BECAUSE THE DEPTHS INVESTIGATED ARE LIMITED AND THE AREA OF THE BORINGS AND/OR SOUNDINGS IS VERY SMALL IN RELATION TO THE ENTIRE AREA, THE DIVISION OF HIGHWAYS DOES NOT WARRANT CONDITIONS BELOW THE DEPTHS INVESTIGATED OR THAT THE CLASSIFICATION OF MATERIAL ENCOUNTERED IN THESE INVESTIGATIONS IS NECESSARILY TYPICAL OF THE ENTIRE SITE.

NO.	DATE	REVISION	BY

STATE OF WISCONSIN
DEPARTMENT OF TRANSPORTATION
DIVISION OF HIGHWAYS

STRUCTURE R-11-23

CONST. SPEC.	DRAWN BY	PLANS CK'D.
2005	WAK	JFR/GAR

SUBSURFACE EXPLORATION

SHEET 2 OF 2

FILE=
SCALE =

8

8

DISTRICT CONTACT:

TYPE CODE = X

STATE PROJECT NUMBER	SHEET NO.
6996-05-07	8.

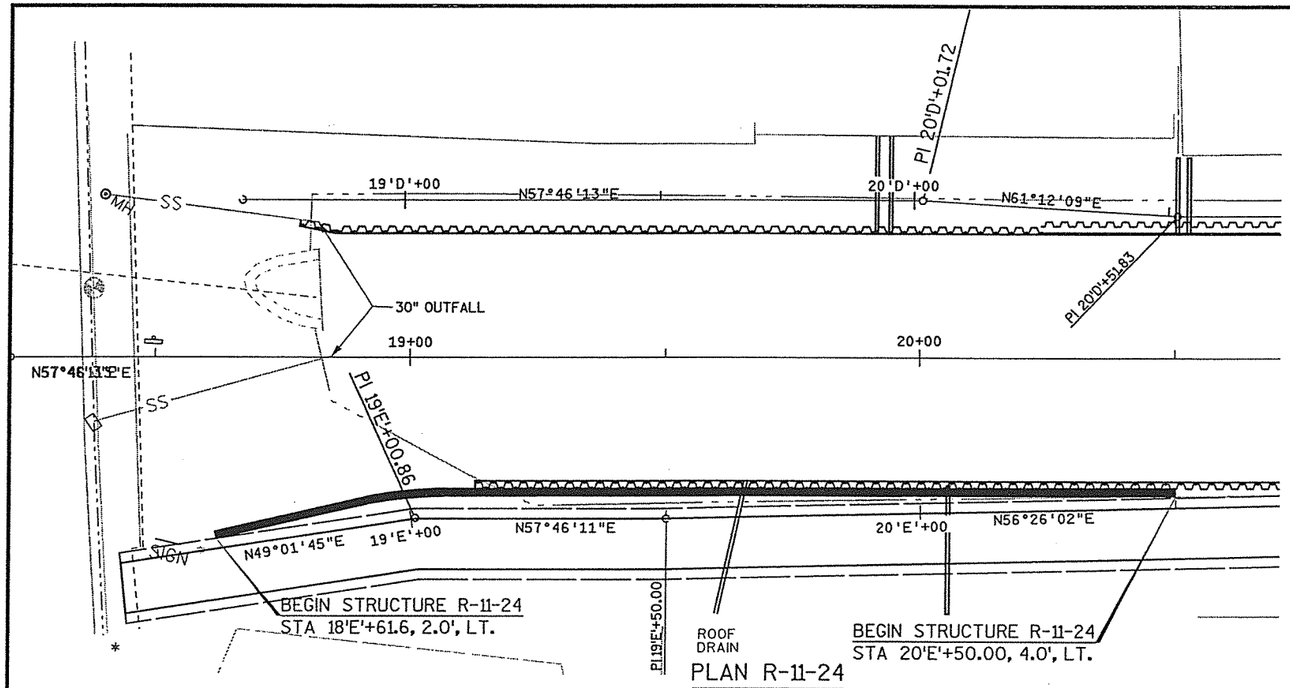

PLAN R-11-24

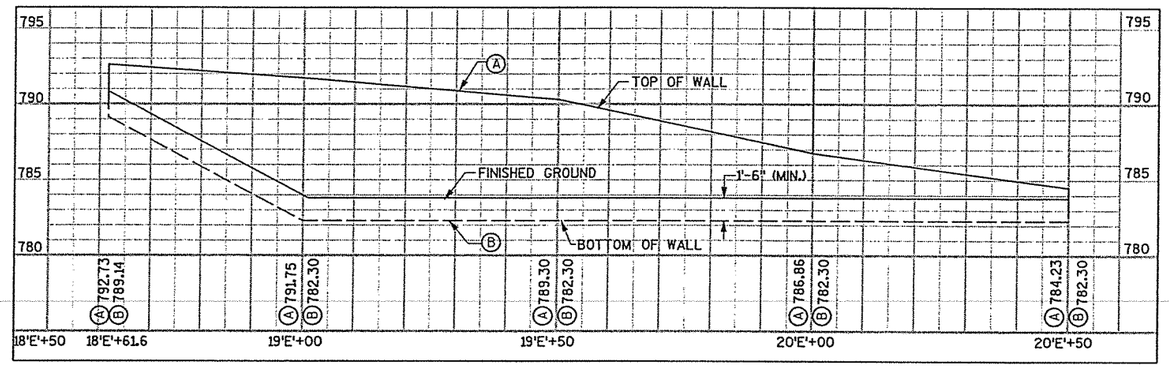

ELEVATION

SOIL PARAMETERS*

ELEVATION	SOIL DESCRIPTIONS	SOIL UNIT WEIGHT (pcf)	COHESION (psf)	ANGLE OF INTERNAL FRICTION (DEGREES)
EL. 790-783	RETAINED SOIL CONSISTING OF NEW FILL MATERIAL	120	0	30
EL. 783-780	NATIVE SILTY FINE SAND WITH SOME GRAVEL	118	0	29
EL. 780-778	NATIVE FINE TO MEDIUM SAND WITH GRAVEL	110	0	28
EL. 778-772	NATIVE FINE TO MEDIUM SAND WITH GRAVEL	112	0	31
EL. 772-759	NATIVE FINE TO MEDIUM SAND WITH GRAVEL	115	0	33
EL. 791-783.5	REINFORCED (INFILL) ZONE SOIL	120	0	30

* DESIGN WALL FOR THESE VALUES

GEOMETRY TABLE

STATION	★ OFFSET TO F.F. OF WALL	ELEV. A	ELEV. B
18'E'+61.64	3.74'LT	792.73	789.14
19'E'+00	6.53'LT	791.75	782.30
19'E'+50	6.33'LT	790.30	782.30
20'E'+00	5.17'LT	786.86	782.30
20'E'+50	4.01'LT	784.23	782.30

★ MEASUREMENTS ARE REFERENCED TO THE 'E' ALIGNMENT

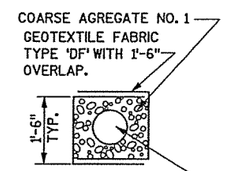

PIPE UNDERDRAIN PERFORATED 6" DIA. MINIMUM. SLOPE TO DRAIN. DRAIN PIPE OUTLETS AT END OF WALL OR AT 40-FOOT INTERVALS.

PIPE UNDERDRAIN DETAIL

COST INCIDENTAL TO THE BID ITEM "MSE MODULAR BLOCK WALL".

PIPE UNDERDRAIN OUTLETS SHALL PENETRATE THROUGH THE STEEL SHEET PILING REVETMENT WALL BUT NOT THROUGH THE TIMBER FACIA

SAFETY FACTORS

MINIMUM REQUIRED DESIGN SAFETY FACTORS		R-11-24
SLIDING:	1.5	2.2
OVERTURNING:	2.0	5.1
GLOBAL STABILITY:	1.5	1.5
ULTIMATE BEARING CAPACITY:		5.3 KSF

TOTAL ESTIMATED QUANTITIES

BID ITEM	UNIT	TOTAL
MECHANICALLY STABILIZED EARTH MODULAR BLOCK WALL	SF	1112

GENERAL NOTES

DRAWINGS SHALL NOT BE SCALED.

SAFETY FACTORS BASED ON REINFORCING LENGTH OF 6 FEET EXTENDING BEYOND THE BACK OF MODULAR BLOCK WALL.

MEASUREMENTS ARE REFERENCED TO THE 'D' AND 'E' ALIGNMENTS.

F.F. - FRONT FACE
B.F. - BACK FACE

LIST OF DRAWINGS

1. GENERAL PLAN
2. SUBSURFACE EXPLORATION

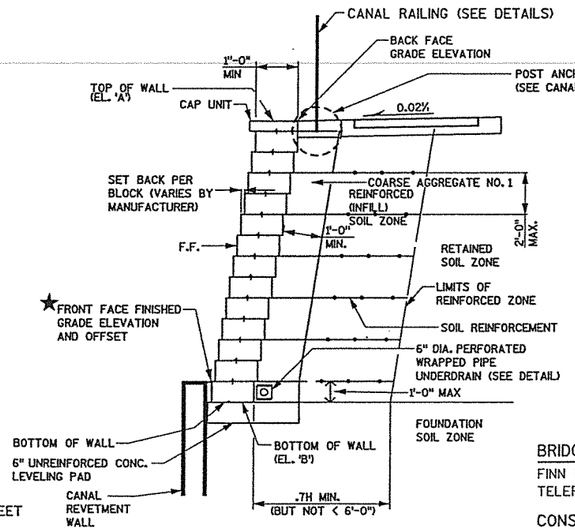

TYPICAL CROSS SECTION OF RETAINING WALL

DESIGN DATA

THE CONTRACTOR SHALL PROVIDE COMPLETE DESIGN, PLANS, DETAILS, SPECIFICATIONS, AND SHOP DRAWINGS FOR THE RETAINING WALL IN ACCORDANCE WITH THE SPECIAL PROVISIONS. THE RETAINING WALL MANUFACTURER SHALL PROVIDE TECHNICAL ASSISTANCE TO THE CONTRACTOR DURING CONSTRUCTION. THE COST OF FURNISHING THESE ITEMS SHALL BE INCLUDED IN THE BID ITEM "MECHANICALLY STABILIZED EARTH MODULAR BLOCK WALL".

PLANS, ELEVATIONS, AND DETAILS SHOWN ON THESE DRAWINGS ARE INTENDED TO INDICATE THE WALL LOCATIONS, LENGTHS, HEIGHTS, AND DETAILS COMMON TO THE WALL SYSTEM SELECTED. THE CONTRACTOR SHALL VERIFY THAT THE WALL SYSTEM SELECTED WILL CONFORM TO THE REQUIRED ALIGNMENTS AND DETAILS.

THE WALL COLOR SHALL BE TAN AND HAVE SPLIT FACE TEXTURE. (SIMILAR TO THE COLOR AND TEXTURE OF THE "SANDSTONE" BLOCK PRODUCED BY ROCKWOOD RETAINING WALLS.

THE RETAINING WALL IS TO BE DESIGNED USING THE ELEVATIONS GIVEN ON THIS SHEET.

DESIGN FOR RETAINING WALL TO PROVIDE FOR FINISHED GRADE SLOPED BEHIND WALL AS SHOWN.

SEE SPECIAL PROVISIONS FOR AESTHETIC TREATMENT OF WALL.

DESIGN RETAINING WALL FOR A LIVE LOAD SURCHARGE OF 120 PSF.

SEE CANAL CROSS SECTION SHEETS FOR EXCAVATION LIMITS.

SEE BORING LOG ON SHEET 2 FOR SUBGRADE SPECIFICATIONS.

ALLOWABLE WALL SYSTEMS

1. MECHANICALLY STABILIZED EARTH MODULAR BLOCK WALL

WISCONSIN
GARY A. RUCHTI
E-30936
MADISON
WI
PROFESSIONAL ENGINEER

Gary A. Ruchti
10/21/09

NO.	DATE	REVISION	BY

MEAD & HUNT
ENGINEERS
ARCHITECTS
SCIENTISTS
PLANNERS

STATE OF WISCONSIN
DEPARTMENT OF TRANSPORTATION
DIVISION OF HIGHWAYS

STRUCTURE R-11-24

RETAINING WALL ALONG PORTAGE CANAL

COUNTY: COLUMBIA		TOWN/CITY/VILLAGE: PORTAGE	
DESIGN SPEC.: AASHTO 2004		LOAD: N/A	CONST. SPEC.: 2005
DESIGNED BY	DESIGN CK'D.	DRAWN BY: WAK	PLANS CK'D. JFR/GAR

APPROVED _____ CHIEF STRUCTURAL DESIGN ENGINEER _____ DATE

GENERAL PLAN

SHEET 1 OF 2

DATE:

BRIDGE OFFICE CONTACT
FINN HUBBARD, P.E.
TELEPHONE: (608) 266-8489

CONSULTANT CONTACT
GARY RUCHTI , P.E.
TELEPHONE: (608) 273-6380

8

8

FILE=
SCALE =

STATE PROJECT NUMBER	SHEET NO.
6996-05-07	8.

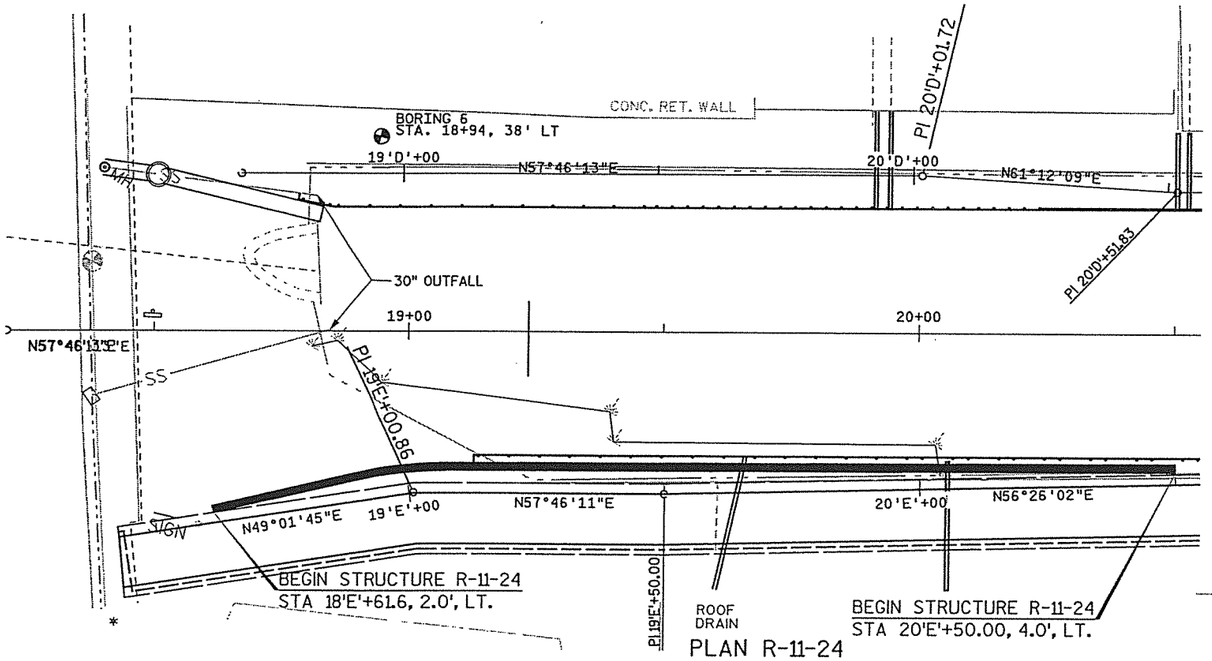

PLAN R-11-24

BORINGS TAKEN BY:
SOILS & ENGINEERING SERVICES, INC.
MADISON, WI
JULY 8, 2004

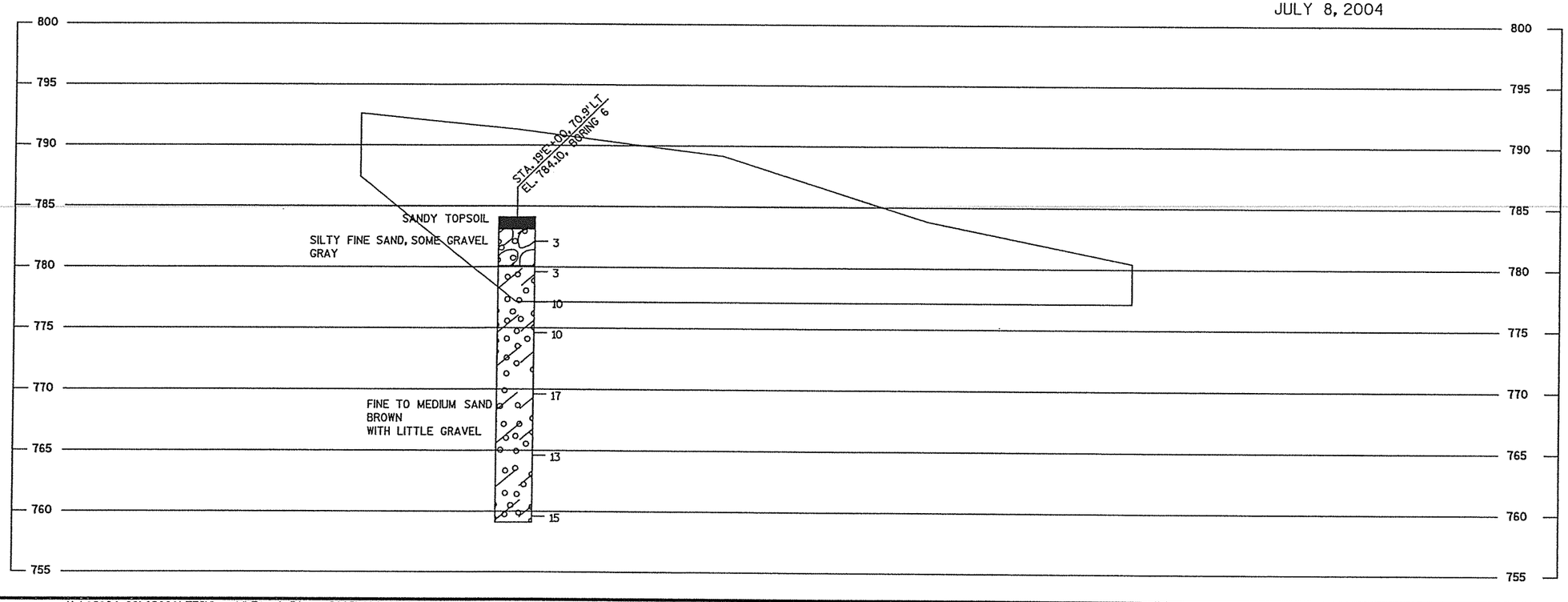

ABBREVIATIONS

F— FINE M— MEDIUM C—COARSE
WS— WEATHERED SO—SOUND

MATERIAL SYMBOLS

TOPSOIL, SILT, SANDSTONE
SAND, PEAT, LIMESTONE
GRAVEL, CLAY, IGNEOUS ROCK

LEGEND OF PROBING

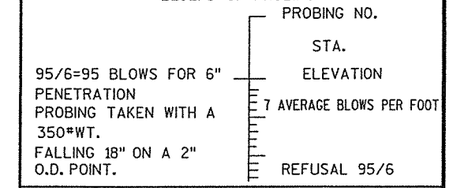

LEGEND OF BORING

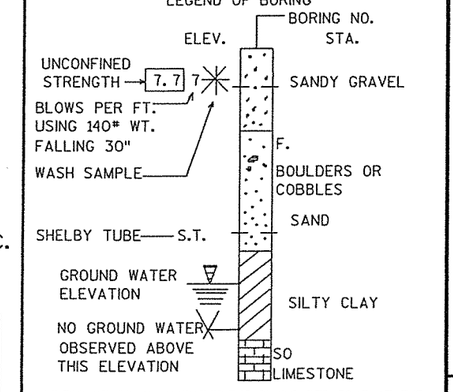

UNLESS OTHERWISE SPECIFIED, THE BLOWS PER FOOT AT THE LOCATIONS INDICATED ARE BASED ON DRIVING A O.D.X1. 4" I.D. SPLIT SPOON SAMPLER WITH A 140# HAMMER HAVING A FREE FALL OF 30". THE BLOW COUNT IS TAKEN IN UNDISTURBED SOIL IMMEDIATELY BELOW A CASED OR OPEN HOLE ELIMINATING SIDE FRICTION ON THE DRIVE PIPE.

SUBSURFACE EXPLORATION FOR FOUNDATION DESIGN AND BIDDERS INFORMATION

TO OBTAIN RELATIVE DATA CONCERNING THE CHARACTER OF MATERIAL IN AND UPON WHICH THE FOUNDATION MIGHT BE BUILT, BORINGS AND/OR SOUNDINGS WERE MADE AT POINTS APPROXIMATELY AS INDICATED ON THIS DRAWING. THE DATA PRESENTED HEREIN REPRESENTS THE FINDINGS OF THE SUBSURFACE EXPLORATIONS MADE. HOWEVER, BECAUSE THE DEPTHS INVESTIGATED ARE LIMITED AND THE AREA OF THE BORINGS AND/OR SOUNDINGS IS VERY SMALL IN RELATION TO THE ENTIRE AREA, THE DIVISION OF HIGHWAYS DOES NOT WARRANT CONDITIONS BELOW THE DEPTHS INVESTIGATED OR THAT THE CLASSIFICATION OF MATERIAL ENCOUNTERED IN THESE INVESTIGATIONS IS NECESSARILY TYPICAL OF THE ENTIRE SITE.

NO.	DATE	REVISION	BY

STATE OF WISCONSIN
DEPARTMENT OF TRANSPORTATION
DIVISION OF HIGHWAYS

STRUCTURE R-11-24

CONST. SPEC. 2005	DRAWN BY WAK	PLANS CK'D. JFR/GAR

SUBSURFACE EXPLORATION

SHEET 2 OF 2

8

8

FILE NAME : X:\16194-00\02001\TECH\cadd\Final Plans 2005\080402_br_r...
PLOT DATE : 10/21/2005
PLOT BY : Madison
PLOT NAME : ...\Final Plans 2005\...
Originator : Dist
FILE =
SCALE =

DISTRICT CONTACT:

TYPE CODE = X

STATE PROJECT NUMBER	SHEET NO.
6996-05-07	8.

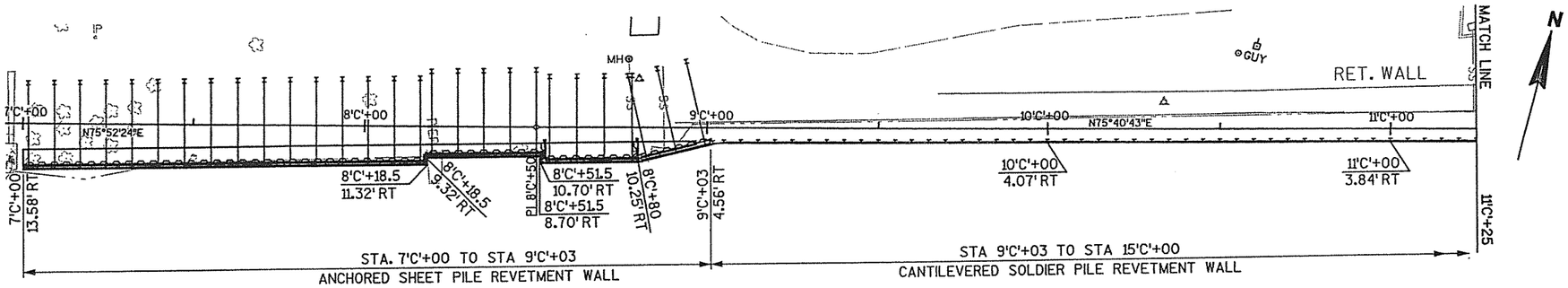

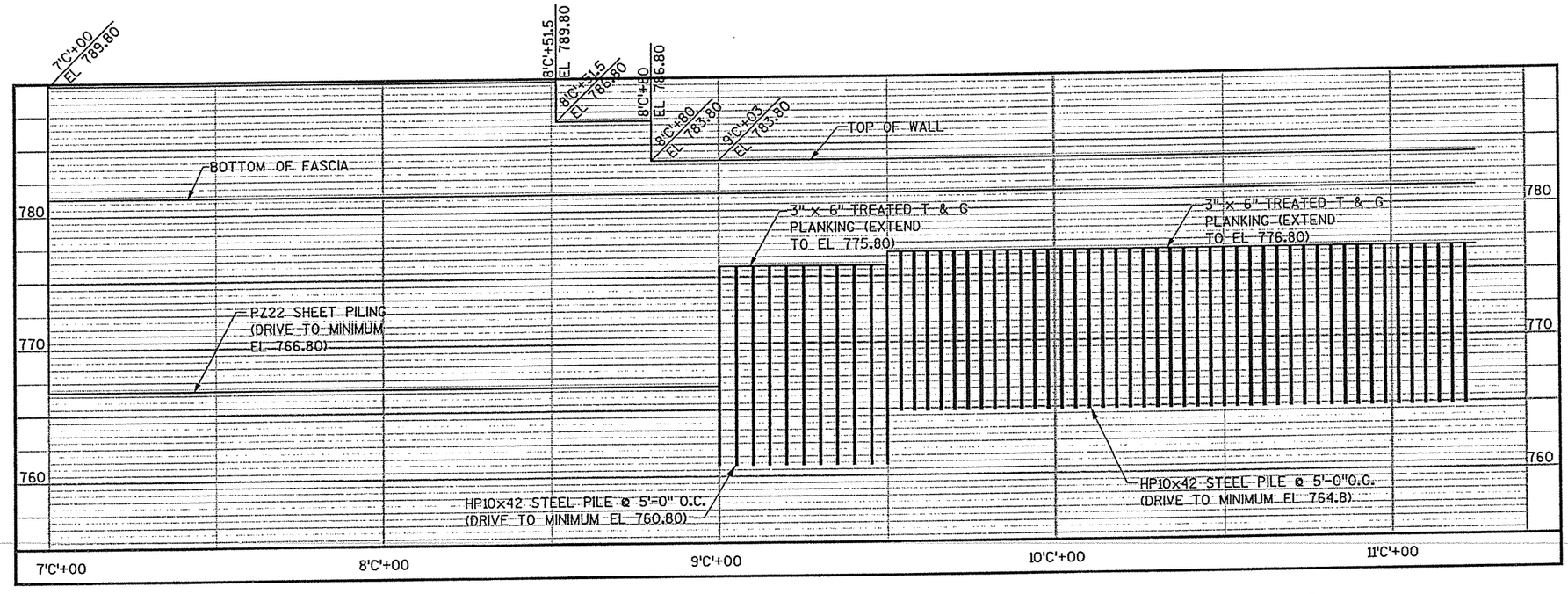

COMBINATION OF SHEET PILE AND CANTILEVERED SOLDIER PILE REVETMENT WALL

BID ITEMS	UNIT	TOTAL
TREATED LUMBER AND TIMBER	MBM	26
HP10x42 PILING STEEL DELIVERED & DRIVEN	LF	2760
STEEL SHEET PERMANENT PILING DELIVERED & DRIVEN	SF	6900
STRUCTURAL STEEL CARBON (STEEL BRACKETS & WALER)	LB	9200
EXCAVATION FOR STRUCTURES REVETMENT WALL (R-11-26)	LS	1
STEEL TIE-BACK CABLES	EA	28

QUANTITIES ARE FOR INFORMATIONAL PURPOSES ONLY.
ALL PROJECT COSTS ARE PAID FOR UNDER BID ITEM " SPV.0090.07"

DESIGN SOIL PARAMETERS

ELEVATION	SOIL DESCRIPTIONS	SOIL UNIT WEIGHT (pcf)	COHESION (psf)	ANGLE OF INTERNAL FRICTION (DEGREES)
ABOVE 778.8	FILL MATERIAL	130	0	37
BELOW 778.8	NATIVE SOIL	115	0	30

STEEL SHEET PILING REVETMENT WALL OPTION

(SEE SPECIAL PROVISIONS)

BID ITEMS	UNIT	TOTAL
TREATED LUMBER AND TIMBER	MBM	12
HP10x42 PILING STEEL DELIVERED & DRIVEN	LF	476
STEEL SHEET PERMANENT PILING DELIVERED & DRIVEN	SF	10600
STRUCTURAL STEEL CARBON (STEEL BRACKETS & WALER)	LB	9200
EXCAVATION FOR STRUCTURES REVETMENT WALL (R-11-26)	LS	1
STEEL TIE-BACK CABLES	EA	28

QUANTITIES ARE FOR INFORMATIONAL PURPOSES ONLY.
ALL PROJECT COSTS ARE PAID FOR UNDER BID ITEM " SPV.0090.07"

BRIDGE OFFICE CONTACT
FINN HUBBARD
TELEPHONE: (608) 266-8489

CONSULTANT CONTACT
RUSTY CHESMORE , P.E.
TELEPHONE: (608) 273-6380

WISCONSIN
RUSSELL A. CHESMORE
E-26272
VERONA
WI
PROFESSIONAL ENGINEER

Russell A. Chesmore
10/28/05

DESIGN DATA

ULTIMATE DESIGN STRESSES:

HP10x42	F'y = 36 ksi
PZ22 SHEET PILE	F'allow = 23.4 ksi
3" x 6" LUMBER	F'b = 1160 psi
	F'v = 78.5 psi
6" x 6" LUMBER	F'b = 750 psi
	F'v = 78.3 psi
ANCHOR RODS	F'y = 55 ksi
	F'allow = 33 ksi

LIST OF DRAWINGS:

GENERAL PLAN	1
GENERAL PLAN	2
SUBSURFACE EXPLORATION	3
PLAN & TYPICAL SECTIONS	4
PLAN & TYPICAL SECTIONS	5
PLAN & TYPICAL SECTIONS	6
PLAN & TYPICAL SECTIONS	7
PLAN & TYPICAL SECTIONS	8
PLAN & TYPICAL SECTIONS	9
PLAN & TYPICAL SECTIONS	10
REVETMENT WALL DETAILS	11

GENERAL NOTES:

CONSTRUCTION REQUIREMENTS SHALL CONFORM TO STATE OF WISCONSIN STANDARD SPECIFICATIONS.

DRAWINGS SHALL NOT BE SCALED.

SEE CANAL CROSS SECTION SHEETS FOR EXCAVATION LIMITS.

SEE BORING LOG ON SHEET 3 FOR SUBGRADE PROPERTIES.

ALL LUMBER SHALL BE PRESSURE TREATED WITH CHROMATED COPPER ARSENATE AS PER CURRENT STATE AND/OR AASHTO SPECIFICATIONS. ALL LUMBER IS ROUGH CUT UNLESS OTHERWISE NOTED.

ALL CONNECTORS AND HARDWARE SHALL BE GALVANIZED OR STAINLESS STEEL AS SHOWN IN THE DETAILS.

ALL EXISTING ELEVATIONS AND DIMENSIONS TO BE FIELD VERIFIED.

ALL LUMBER CUT OR DRILLED IN FIELD SHALL BE TREATED WITH AN APPROVED PRESERVATIVE.

THIS REVETMENT WALL WAS DESIGNED TO RETAIN THE AMOUNT OF SOIL AS SHOWN ON THESE PLANS. THE DESIGNER SHOULD BE CONSULTED PRIOR TO ANY FUTURE DREDGING OF THE CANAL OR INCREASE IN SURCHARGE OF THE RETAINED SOIL.

F.F. - FRONT FACE
B.F. - BACK FACE.

NO.	DATE	REVISION	BY

MEAD & HUNT
ENGINEERS
ARCHITECTS
SCIENTISTS
PLANNERS

STATE OF WISCONSIN
DEPARTMENT OF TRANSPORTATION
DIVISION OF HIGHWAYS

STRUCTURE R-11-26

REVETMENT WALL ALONG PORTAGE CANAL

COUNTY COLUMBIA		~~TOWN/CITY/VILLAGE~~ PORTAGE	
DESIGN SPEC. AASHTO 2005		LOAD N/A	CONST. SPEC. 2005
DESIGNED BY JAA	DESIGN CK'D. JFR	DRAWN BY WAK	PLANS CK'D. JFR/GAR

APPROVED _____ CHIEF STRUCTURAL DESIGN ENGINEER _____ DATE

GENERAL PLAN

SHEET 1 OF 11

DATE:

FILE= SCALE =

8

8

DISTRICT CONTACT:

TYPE CODE = X

STATE PROJECT NUMBER	SHEET NO.
6996-05-07	8.

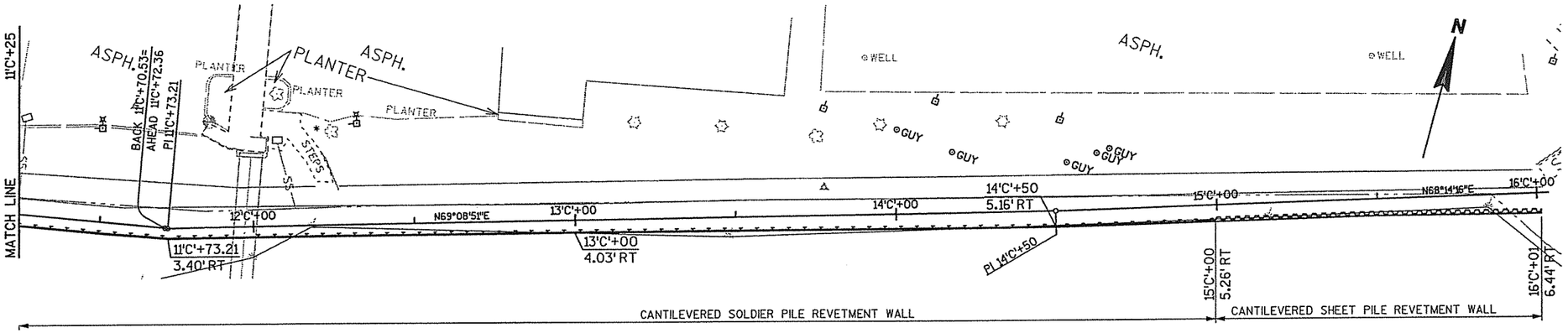

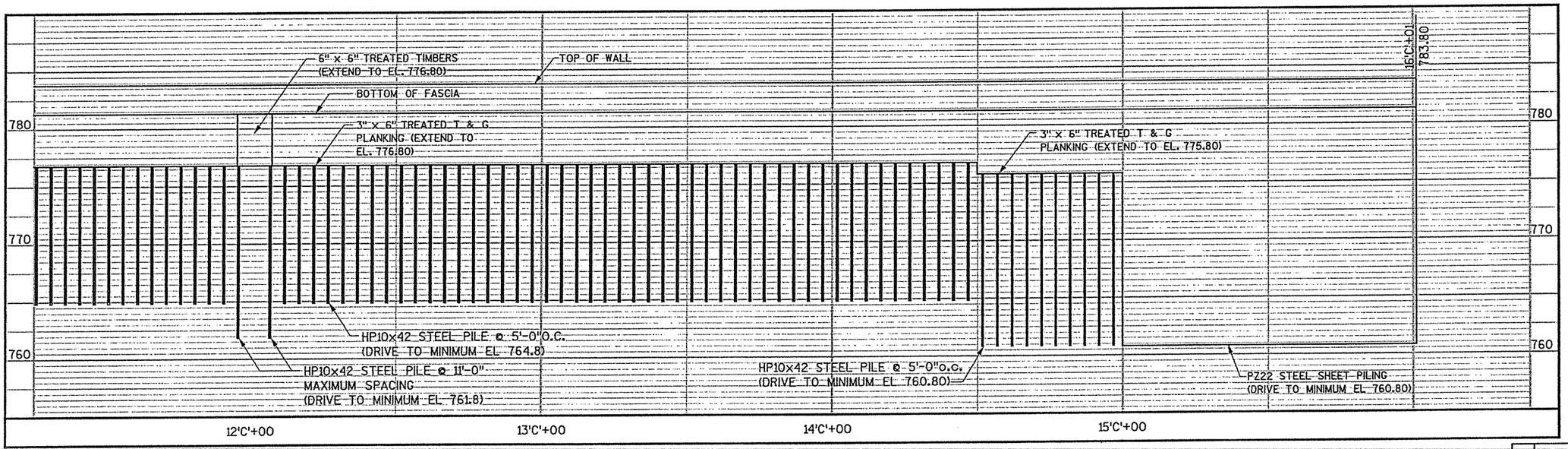

8

8

DESIGN SOIL PARAMETERS

ELEVATION	SOIL DESCRIPTIONS	SOIL UNIT WEIGHT (pcf)	COHESION (psf)	ANGLE OF INTERNAL FRICTION (DEGREES)
ABOVE 778.8	FILL MATERIAL	130	0	37
BELOW 778.8	SOIL	115	0	30

BRIDGE OFFICE CONTACT
FINN HUBBARD
TELEPHONE: (608) 266-8489

CONSULTANT CONTACT
GARY RUCHTI, P.E.
TELEPHONE: (608) 273-6380

NO.	DATE	REVISION	BY

MEAD & HUNT ENGINEERS ARCHITECTS SCIENTISTS PLANNERS

STATE OF WISCONSIN
DEPARTMENT OF TRANSPORTATION
DIVISION OF HIGHWAYS

STRUCTURE R-11-26

REVETMENT WALL ALONG PORTAGE CANAL

COUNTY	TOWN/CITY/~~VILLAGE~~	
COLUMBIA	PORTAGE	
DESIGN SPEC. AASHTO 2005	LOAD N/A	CONST. SPEC. 2005
DESIGNED BY JAA / DESIGN CK'D. JFR	DRAWN BY WAK	PLANS CK'D. JFR/GAR

APPROVED _____ CHIEF STRUCTURAL DESIGN ENGINEER _____ DATE

GENERAL PLAN

SHEET 2 OF 11

DATE:

FILE=

SCALE =

PLOT SCALE : 40.000000 ' / IN.

I.D.

STATE PROJECT NUMBER	SHEET NO.
6996-05-07	8.

BORINGS BY:
SOILS & ENGINEERING SERVICES, INC.
MADISON, WI
JULY 8, 2004

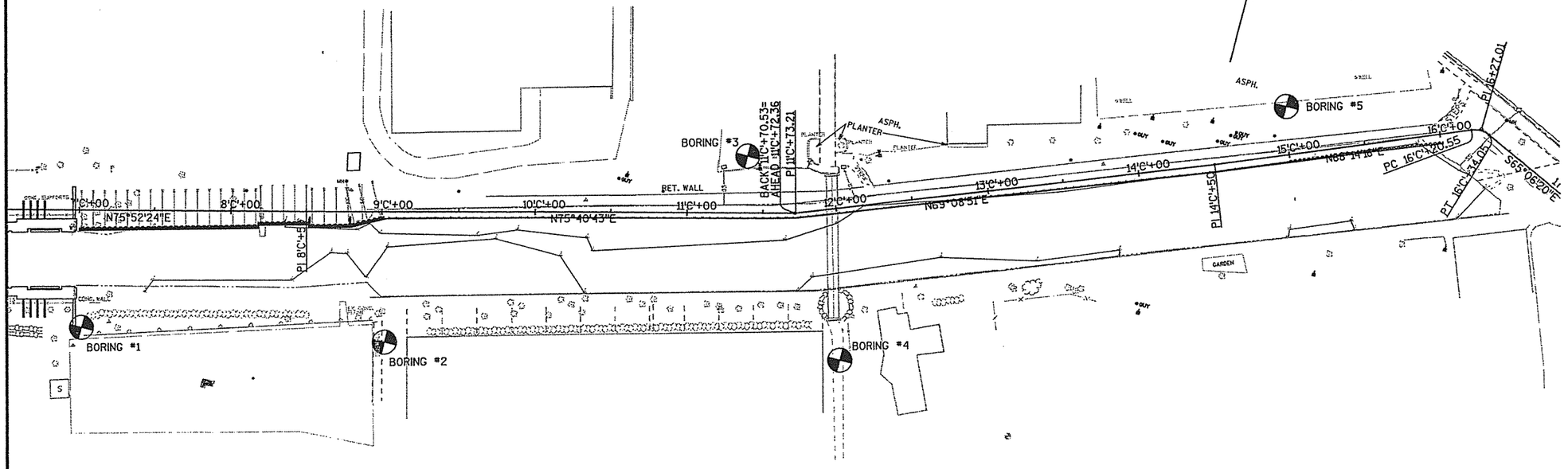

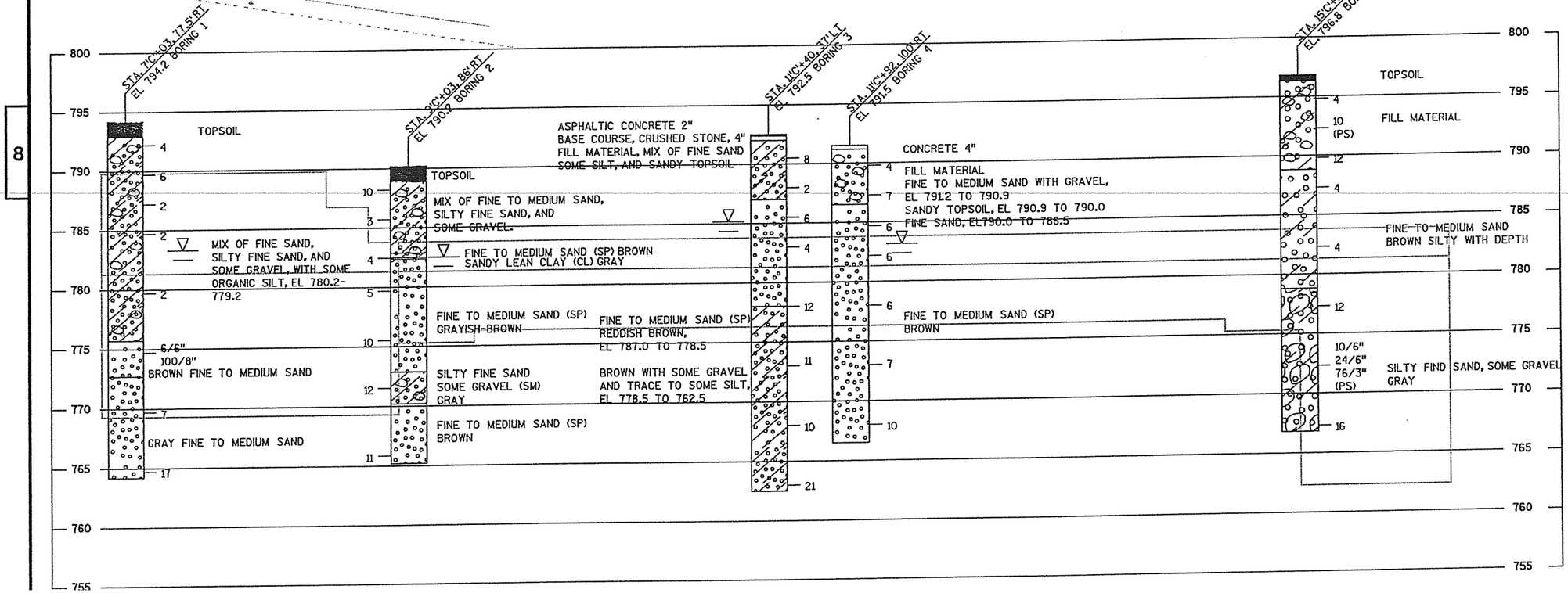

ABBREVIATIONS

F— FINE M— MEDIUM C— COARSE
WS— WEATHERED SO— SOUND

MATERIAL SYMBOLS

TOPSOIL, SAND, GRAVEL, SILT, PEAT, CLAY, SANDSTONE, LIMESTONE, IGNEOUS ROCK

LEGEND OF PROBING

PROBING NO.
STA.
ELEVATION
7 AVERAGE BLOWS PER FOOT
REFUSAL 95/6

95/6=95 BLOWS FOR 6" PENETRATION
PROBING TAKEN WITH A 350#WT. FALLING 18" ON A 2" O.D. POINT.

LEGEND OF BORING

BORING NO.
STA.
ELEV.
UNCONFINED STRENGTH → 7.7
BLOWS PER FT. USING 140# WT. FALLING 30"
WASH SAMPLE
SHELBY TUBE— S.T.
GROUND WATER ELEVATION
NO GROUND WATER OBSERVED ABOVE THIS ELEVATION
SANDY GRAVEL
F.
BOULDERS OR COBBLES
SAND
SILTY CLAY
SO
LIMESTONE

UNLESS OTHERWISE SPECIFIED, THE BLOWS PER FOOT AT THE LOCATIONS INDICATED ARE BASED ON DRIVING A O.D.X1 4" I.D. SPLIT SPOON SAMPLER WITH A 140# HAMMER HAVING A FREE FALL OF 30". THE BLOW COUNT IS TAKEN IN UNDISTURBED SOIL IMMEDIATELY BELOW A CASED OR OPEN HOLE ELIMINATING SIDE FRICTION ON THE DRIVE PIPE.

SUBSURFACE EXPLORATION FOR FOUNDATION DESIGN AND BIDDERS INFORMATION

TO OBTAIN RELATIVE DATA CONCERNING THE CHARACTER OF MATERIAL IN AND UPON WHICH THE FOUNDATION MIGHT BE BUILT, BORINGS AND/OR SOUNDINGS WERE MADE AT POINTS APPROXIMATELY AS INDICATED ON THIS DRAWING. THE DATA PRESENTED HEREIN REPRESENTS THE FINDINGS OF THE SUBSURFACE EXPLORATIONS MADE. HOWEVER, BECAUSE THE DEPTHS INVESTIGATED ARE LIMITED AND THE AREA OF THE BORINGS AND/OR SOUNDINGS IS VERY SMALL IN RELATION TO THE ENTIRE AREA, THE DIVISION OF HIGHWAYS DOES NOT WARRANT CONDITIONS BELOW THE DEPTHS INVESTIGATED OR THAT THE CLASSIFICATION OF MATERIAL ENCOUNTERED IN THESE INVESTIGATIONS IS NECESSARILY TYPICAL OF THE ENTIRE SITE.

NO.	DATE	REVISION	BY

STATE OF WISCONSIN
DEPARTMENT OF TRANSPORTATION
DIVISION OF HIGHWAYS

STRUCTURE R-11-26

CONST. SPEC. 2005	DRAWN BY WAK	PLANS CK'D. JFR/GAR

SUBSURFACE EXPLORATION

SHEET 3 OF 11

FILE=
SCALE =

8

8

STATE PROJECT NUMBER	SHEET NO.
6966-05-07	8.

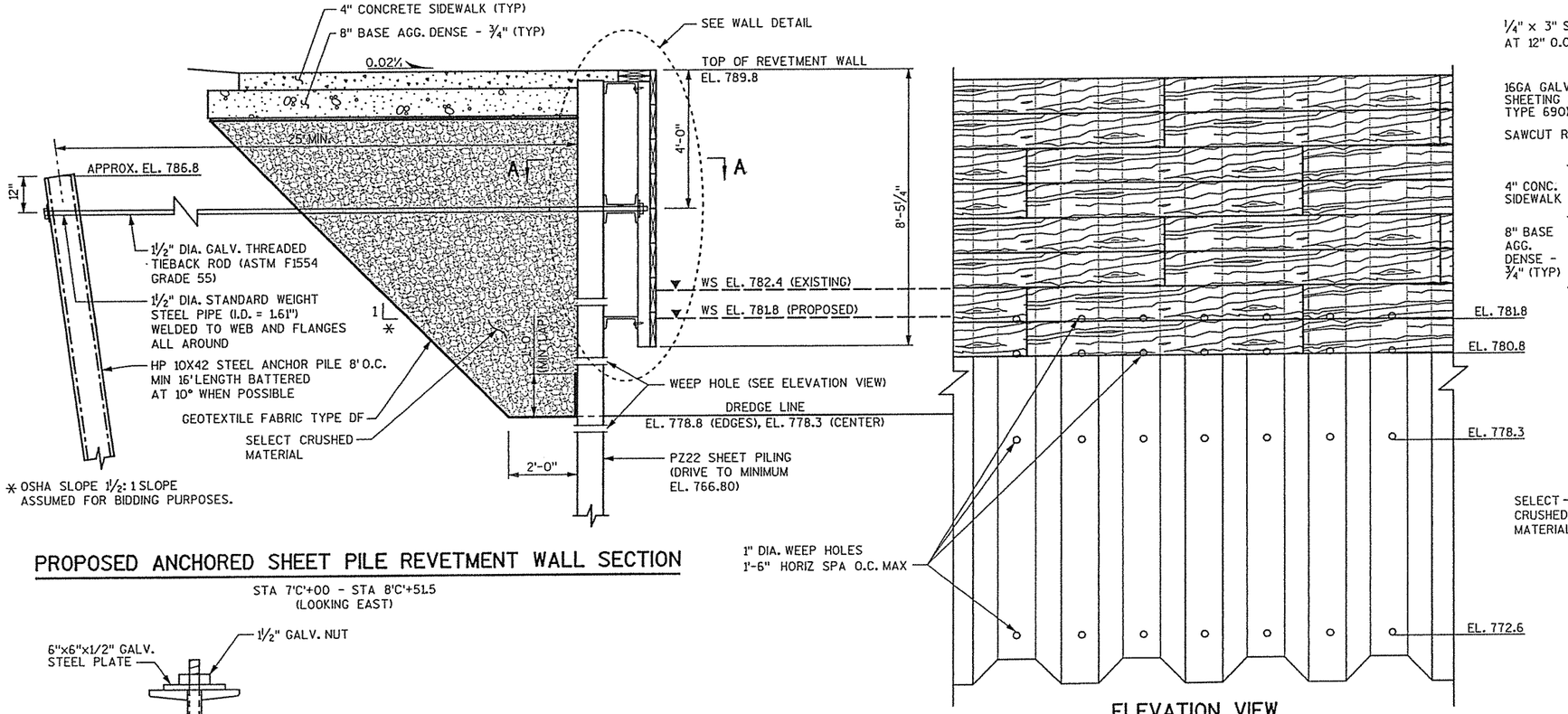

PROPOSED ANCHORED SHEET PILE REVETMENT WALL SECTION

STA 7'C'+00 - STA 8'C'+51.5
(LOOKING EAST)

ELEVATION VIEW

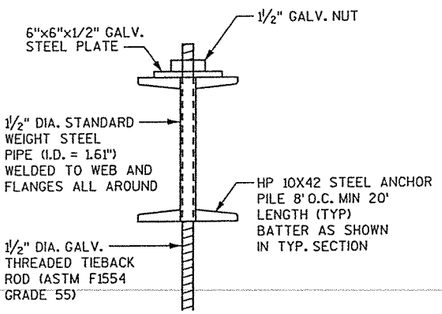

ANCHOR DETAIL

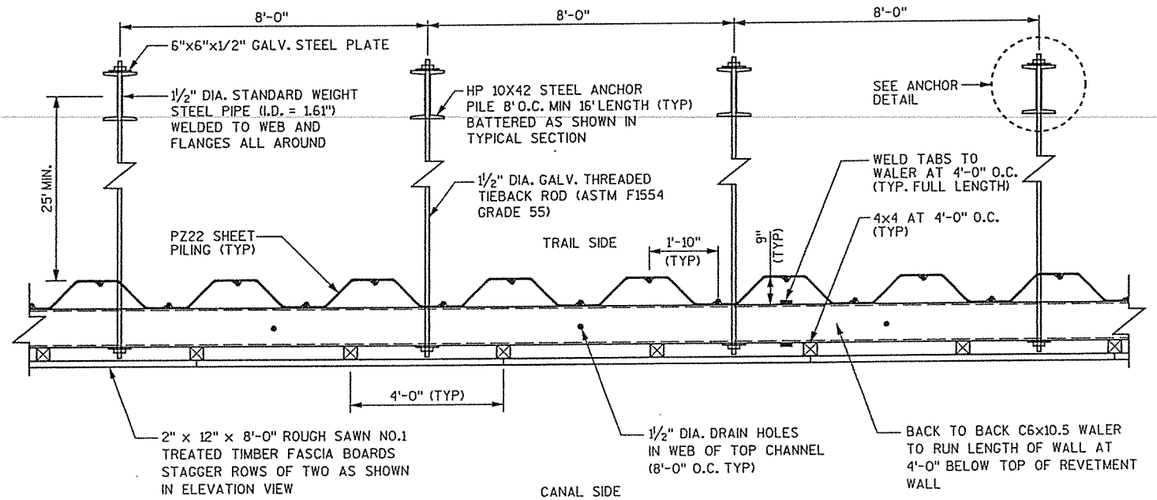

PROPOSED ANCHORED SHEET PILE REVETMENT WALL PLAN A-A

STA 7'C'+00 - STA 8'C'+51.5

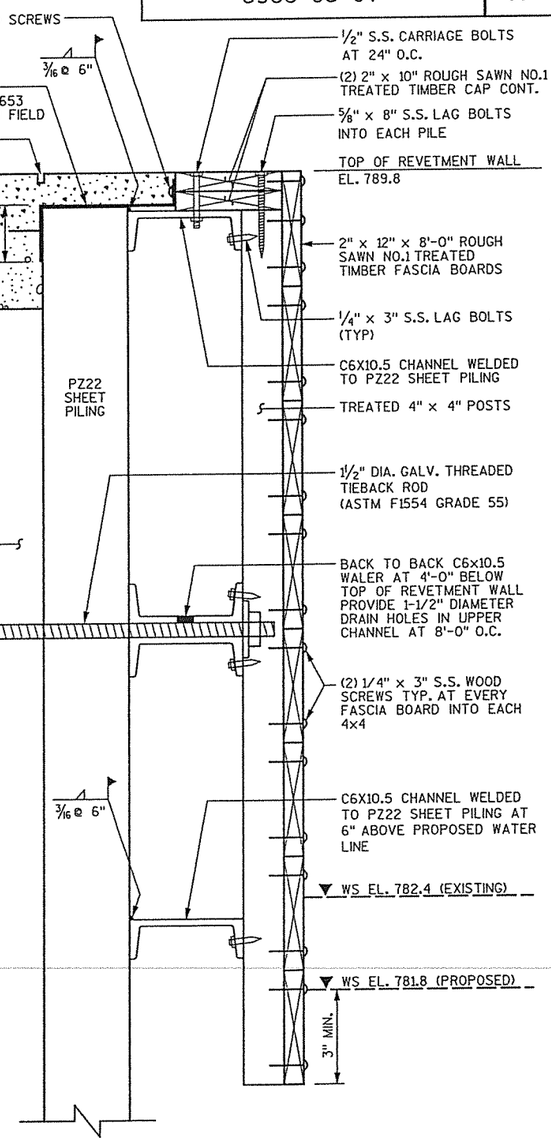

WALL DETAIL

NOTES:

DRAWING SHALL NOT BE SCALED.

ALL TIMBER CONNECTORS AND HARDWARE SHALL BE INCLUDED IN THE COST FOR BID ITEM "

UNLESS OTHERWISE NOTED, ALL STEEL IS BARE STEEL.

S.S. = STAINLESS STEEL

ALL GALVANIZED STEEL SHALL BE HOT-DIP GALVANIZED IN ACCORDANCE WITH ASTM SPECIFICATION A153.

WALERS, TIE RODS, NUTS, AND WASHERS SHALL BE INCLUDED IN THE COST FOR BID ITEM "STRUCTURAL CARBON STEEL".

FASCIA AND CAP BOARD MUST REMAIN STRAIGHT.

NO.	DATE	REVISION	BY

STATE OF WISCONSIN
DEPARTMENT OF TRANSPORTATION
DIVISION OF HIGHWAYS

STRUCTURE R-11-26

CONST. SPEC. 2005	DRAWN BY BXJ	PLANS CK'D. GAR

PLAN & TYPICAL SECTION

SHEET 4 OF 11

8

8

FILE = X:\16194-00\02001\TECH\cadd\Final Plans 2005\080604_wd.dgn
SCALE =

PLOT SCALE : 4.0000 ' / IN.

STATE PROJECT NUMBER	SHEET NO.
6966-05-07	8.

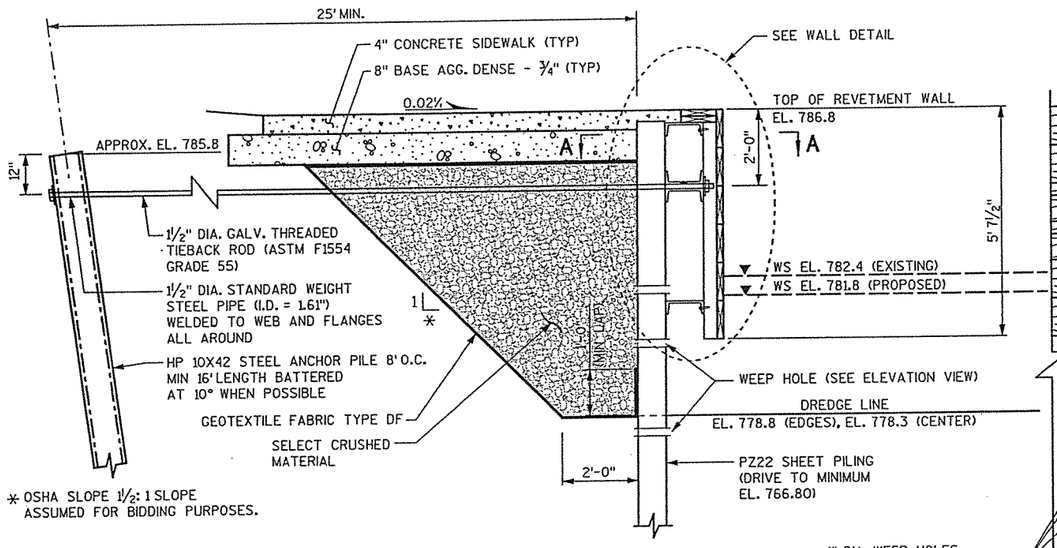

PROPOSED ANCHORED SHEET PILE REVETMENT WALL SECTION

STA 8'C'+51.5 - STA 8'C'+80
(LOOKING EAST)

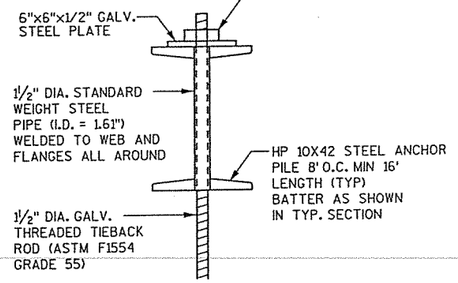

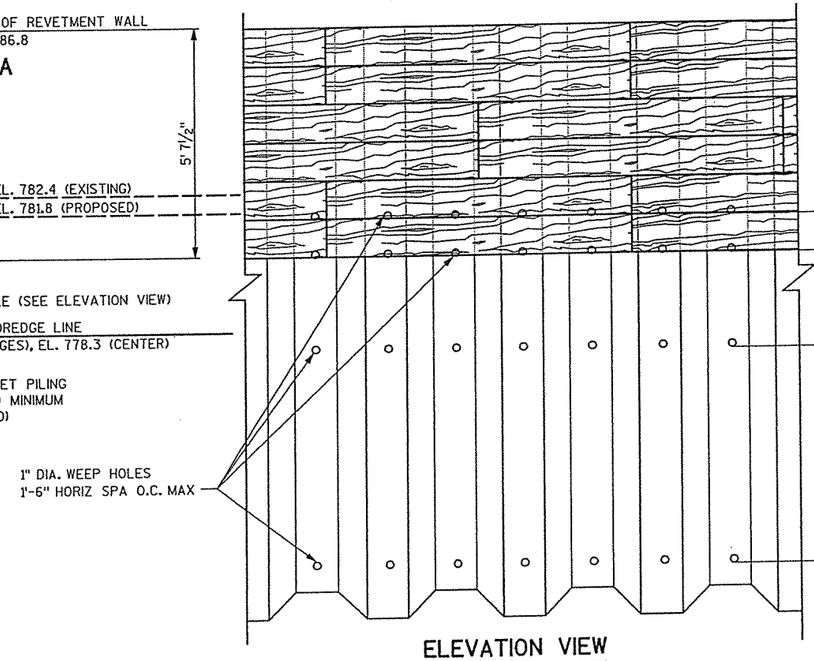

ELEVATION VIEW

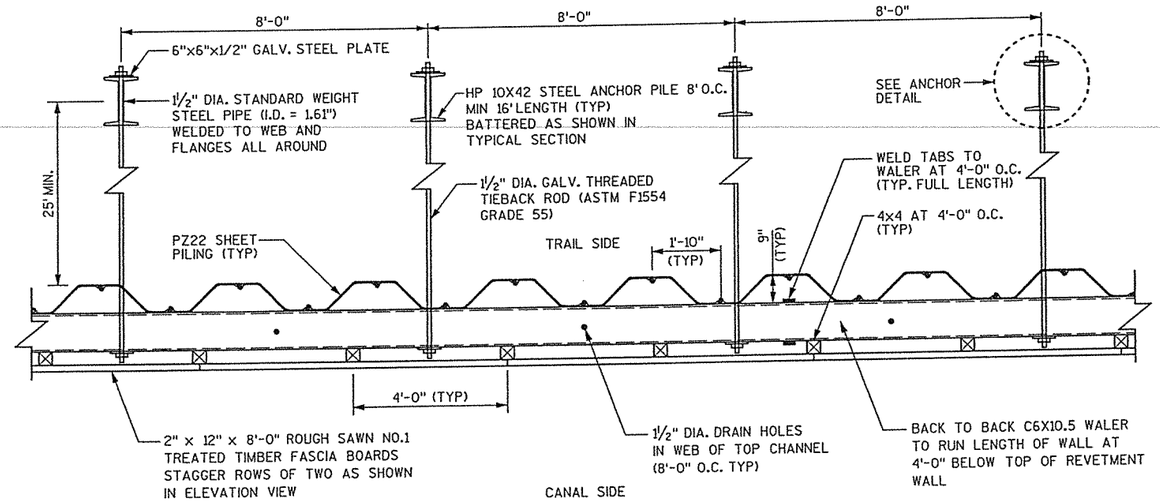

PROPOSED ANCHORED SHEET PILE REVETMENT WALL PLAN A-A

STA 8'C'+51.5 - STA 8'C'+80

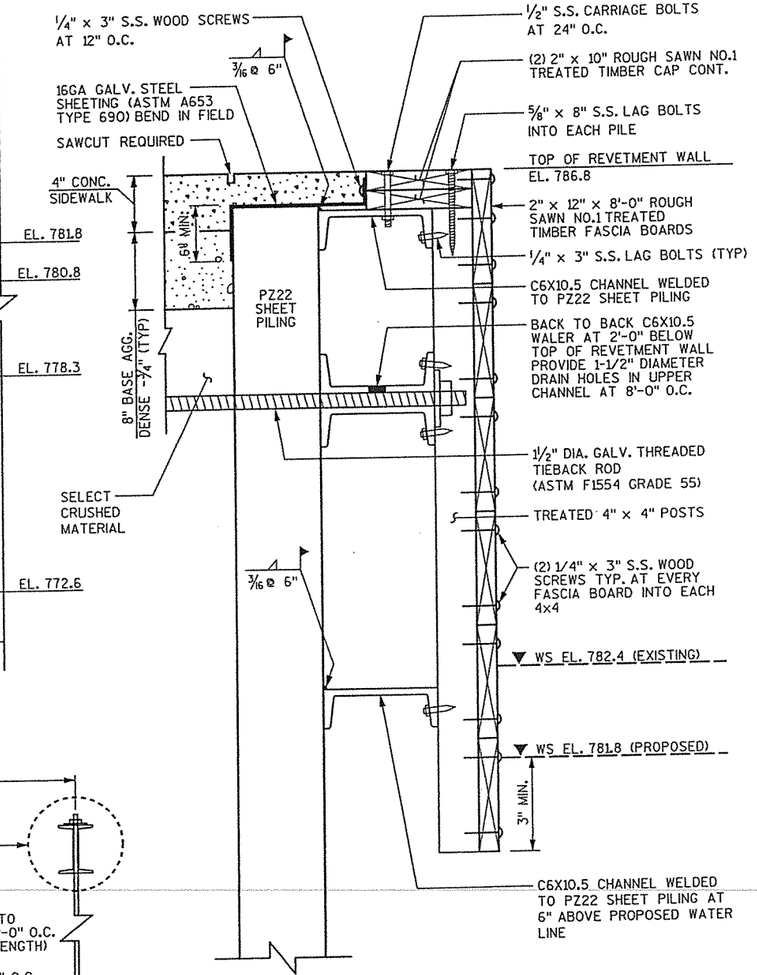

WALL DETAIL

NOTES:

DRAWING SHALL NOT BE SCALED.

ALL TIMBER CONNECTORS AND HARDWARE SHALL BE INCLUDED IN THE COST FOR BID ITEM "SPV. 0090.07"

UNLESS OTHERWISE NOTED, ALL STEEL IS BARE STEEL.

S.S. = STAINLESS STEEL

ALL GALVANIZED STEEL SHALL BE HOT-DIP GALVANIZED IN ACCORDANCE WITH ASTM SPECIFICATION A153.

WALERS, TIE RODS, NUTS, AND WASHERS SHALL BE INCLUDED IN THE COST FOR BID ITEM "STRUCTURAL CARBON STEEL".

FASCIA AND CAP BOARD MUST REMAIN STRAIGHT.

NO.	DATE	REVISION	BY

STATE OF WISCONSIN
DEPARTMENT OF TRANSPORTATION
DIVISION OF HIGHWAYS

STRUCTURE R-11-26

CONST. SPEC.	2005	DRAWN BY	BXJ	PLANS CK'D.	GAR

PLAN & TYPICAL SECTION

SHEET 5 OF 11

8

8

FILE= x:\16194-00\02001\TECH\cadd\Final Plans 2005\080605_wd.dgn
SCALE =

STATE PROJECT NUMBER	SHEET NO.
6966-05-07	8.

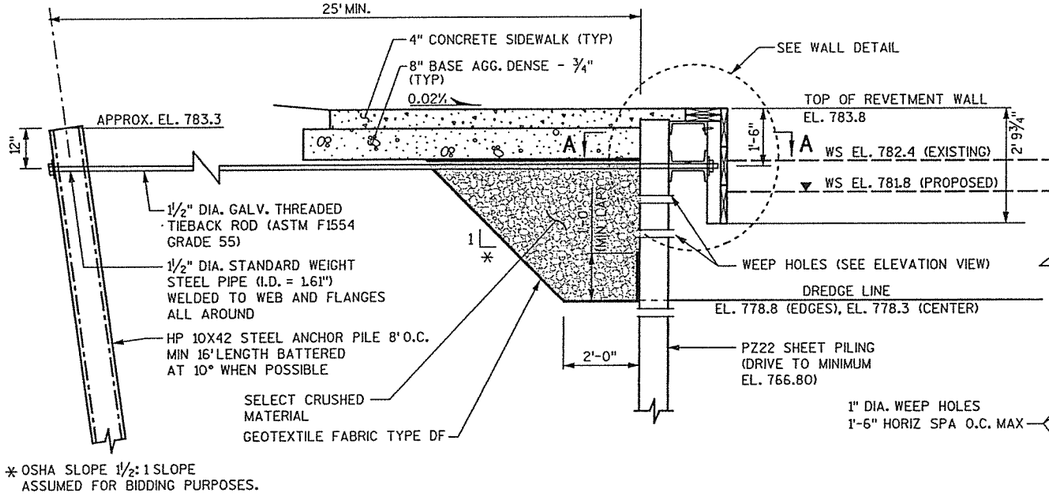

* OSHA SLOPE 1½ : 1 SLOPE ASSUMED FOR BIDDING PURPOSES.

PROPOSED ANCHORED SHEET PILE REVETMENT WALL SECTION

STA 8'C'+80 - STA 9'C'+03
(LOOKING EAST)

ELEVATION VIEW

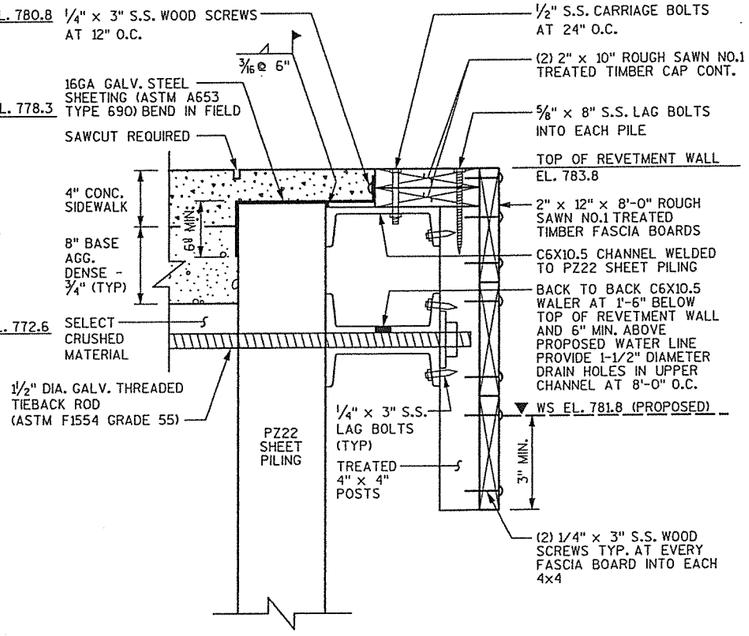

WALL DETAIL

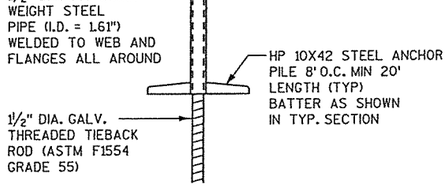

ANCHOR DETAIL

NOTES:

DRAWING SHALL NOT BE SCALED.

ALL TIMBER CONNECTORS AND HARDWARE SHALL BE INCLUDED IN THE COST FOR BID ITEM "SPV. 0090.07"

UNLESS OTHERWISE NOTED, ALL STEEL IS BARE STEEL.

S.S. = STAINLESS STEEL

ALL GALVANIZED STEEL SHALL BE HOT-DIP GALVANIZED IN ACCORDANCE WITH ASTM SPECIFICATION A153.

WALERS, TIE RODS, NUTS, AND WASHERS SHALL BE INCLUDED IN THE COST FOR BID ITEM "STRUCTURAL CARBON STEEL".

FASCIA AND CAP BOARD MUST REMAIN STRAIGHT.

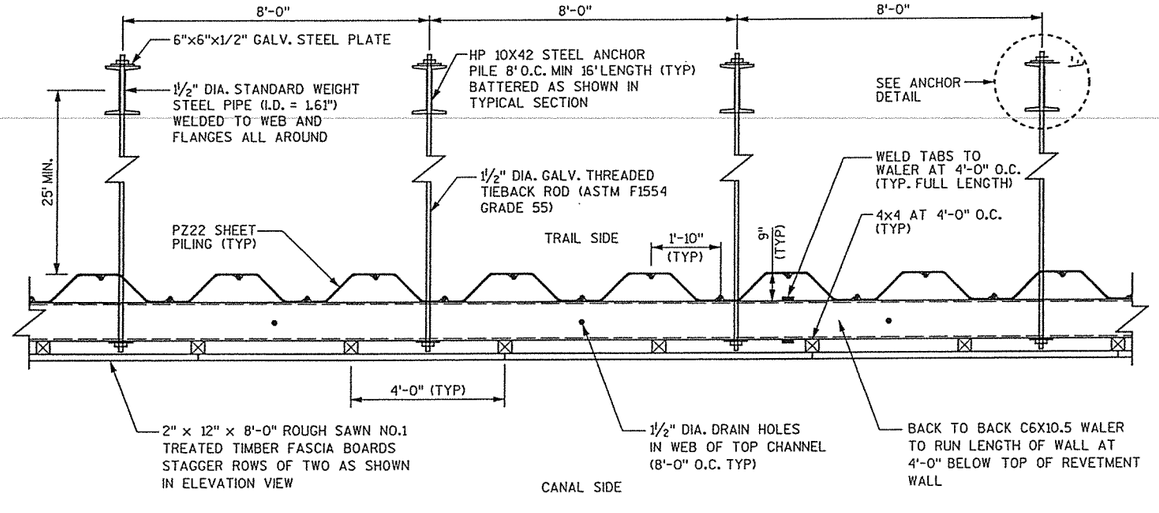

PROPOSED ANCHORED SHEET PILE REVETMENT WALL PLAN A-A

STA 8'C'+80 - STA 9'C'+03

NO.	DATE	REVISION	BY

STATE OF WISCONSIN
DEPARTMENT OF TRANSPORTATION
DIVISION OF HIGHWAYS

STRUCTURE R-11-26

CONST. SPEC. 2005	DRAWN BY BXJ	PLANS CK'D. GAR

PLAN & TYPICAL SECTION

SHEET 6 OF 11

8

8

FILE = X:\16194-00\02001\TECH\cadd\Final Plans 2005\080606_wd.dgn
SCALE =

PLOT DATE : 10/28/2005 PLOT BY : Madison PLOT NAME : \Final Plans 2005\080606_wd.dgn Originator : Dist PLOT SCALE : 4.0000 ' / IN. I.D.

STATE PROJECT NUMBER	SHEET NO.
6966-05-07	8.

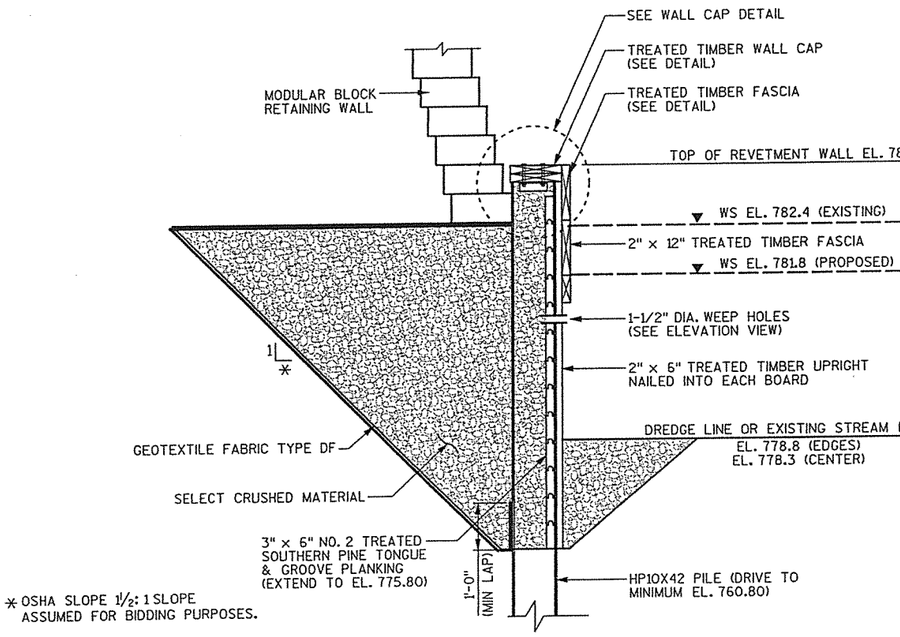

* OSHA SLOPE 1½:1 SLOPE ASSUMED FOR BIDDING PURPOSES.

PROPOSED CANITLEVERED SOLDIER PILE REVETMENT WALL SECTION

STA 9'C'+03 - STA 9'C'+50 : STA 14'C'+53 - STA 15'C'+00
(LOOKING EAST)

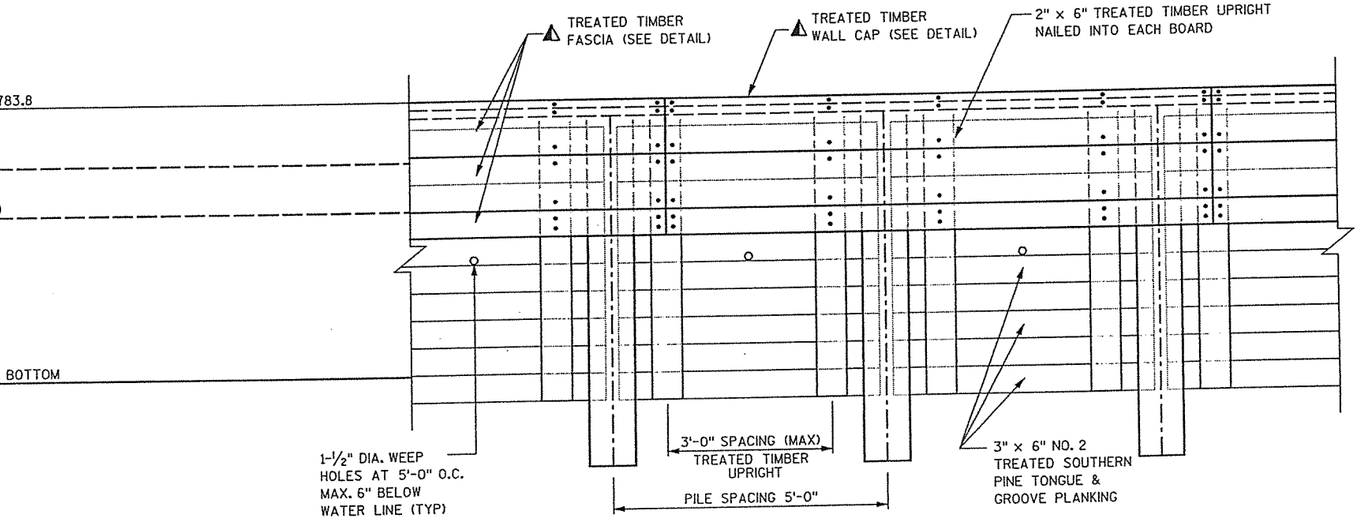

ELEVATION VIEW

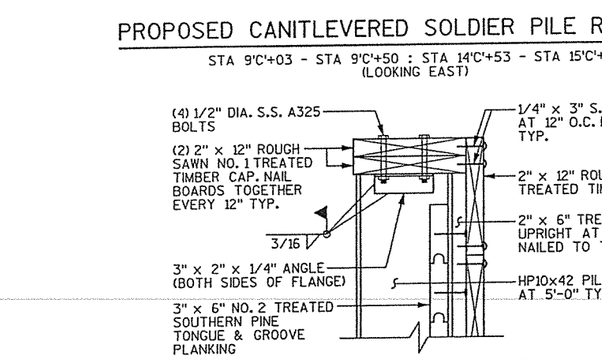

WALL CAP DETAIL

TYP. AT PILES SHOWN

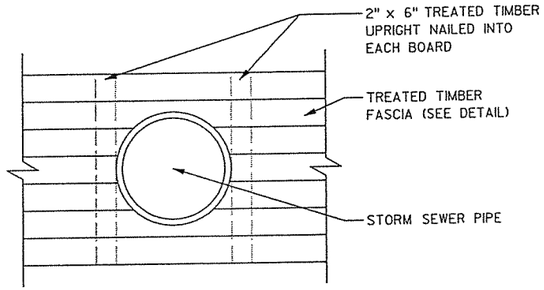

STORM SEWER/PRIVATE DRAIN PENETRATION DETAIL

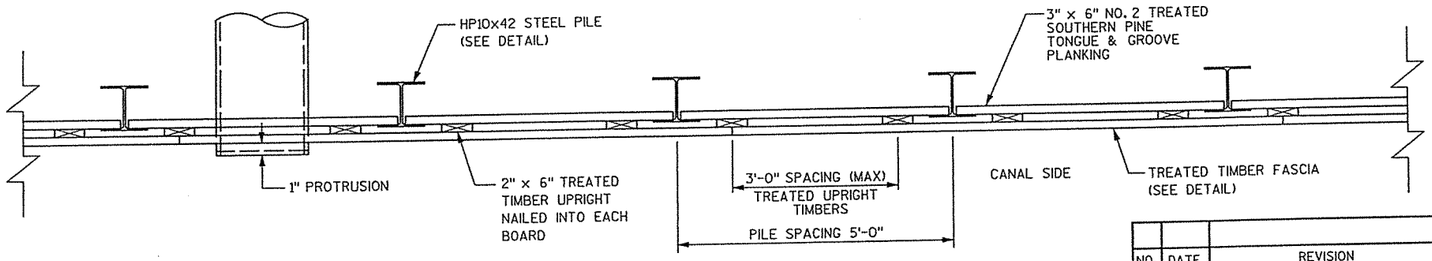

PROPOSED CANITLEVERED SOLDIER PILE REVETMENT WALL PLAN VIEW

STA 9'C'+03 - STA 9'C'+50 : STA 14'C'+53 - STA 15'C'+00

NOTES:

DRAWING SHALL NOT BE SCALED.

ALL TIMBER CONNECTORS AND HARDWARE SHALL BE INCLUDED IN THE COST FOR BID ITEM "SPV. 0090.07"

UNLESS OTHERWISE NOTED, ALL STEEL IS BARE STEEL.

S.S. = STAINLESS STEEL

⚠ FASCIA AND CAP BOARD MUST REMAIN STRAIGHT.

NO.	DATE	REVISION	BY

STATE OF WISCONSIN
DEPARTMENT OF TRANSPORTATION
DIVISION OF HIGHWAYS

STRUCTURE R-11-26

CONST. SPEC.	2005	DRAWN BY	BXJ	PLANS CK'D.	GAR

PLAN & TYPICAL SECTIONS

SHEET 7 OF 11

8

8

FILE= x:\16194-00\02001\TECH\cadd\Final Plans 2005\080607_wd.dgn
SCALE =

STATE PROJECT NUMBER	SHEET NO.
6966-05-07	8.

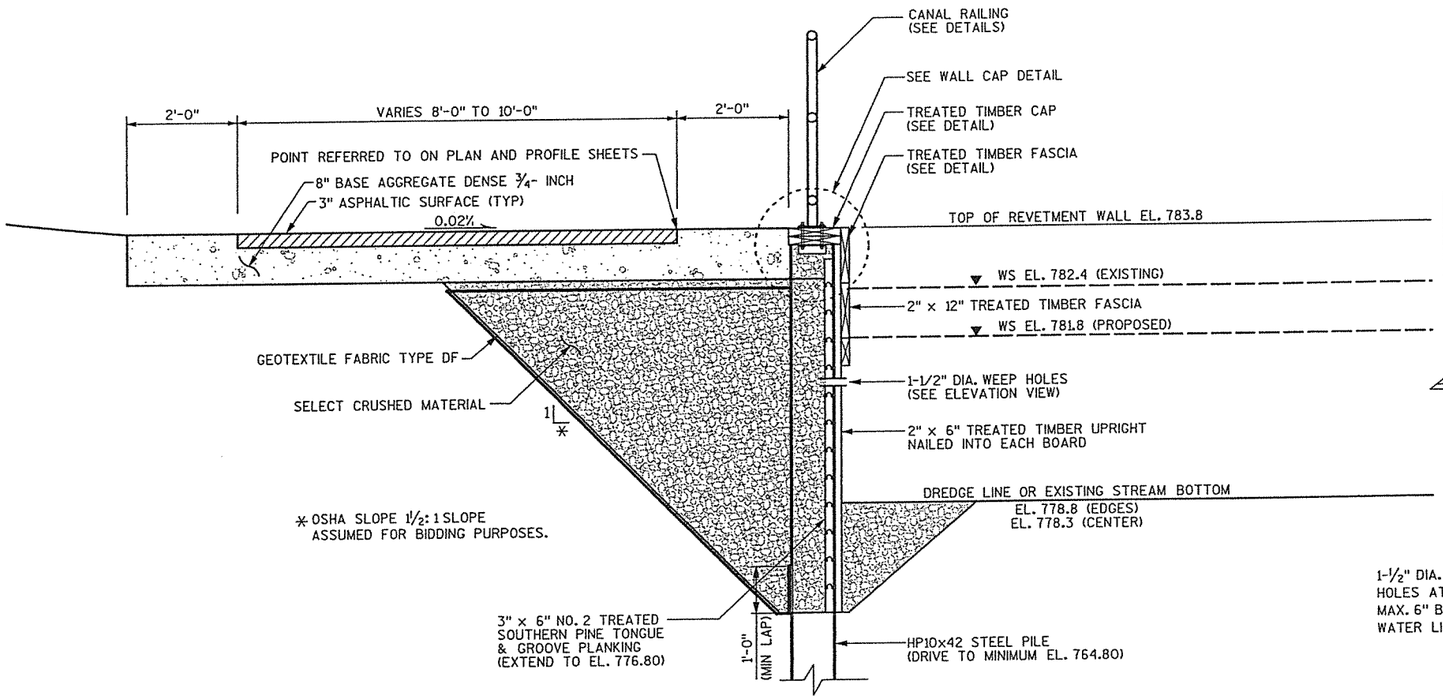

PROPOSED CANITLEVERED SOLDIER PILE REVETMENT WALL SECTION

STA 9'C'+50 - STA 11'C'+90 : STA 12'C'+01 - STA 14'C'+53
(LOOKING EAST)

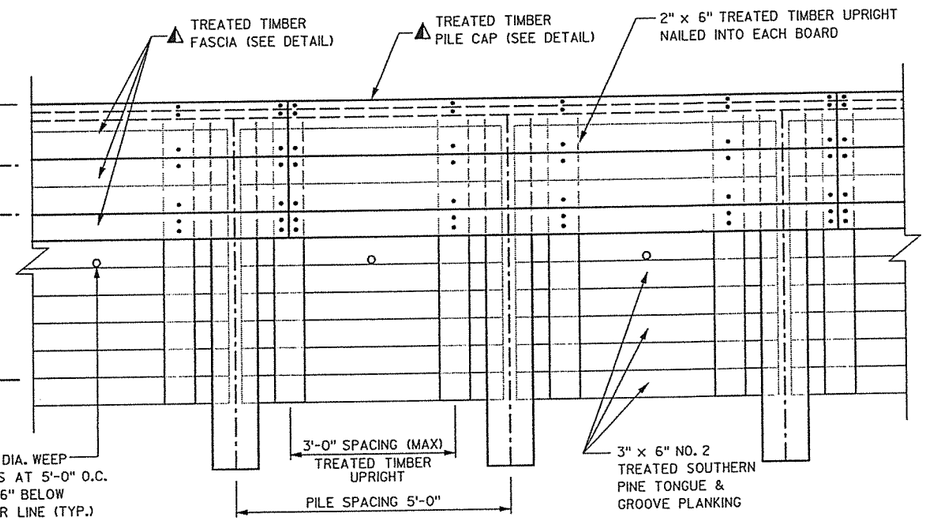

ELEVATION VIEW

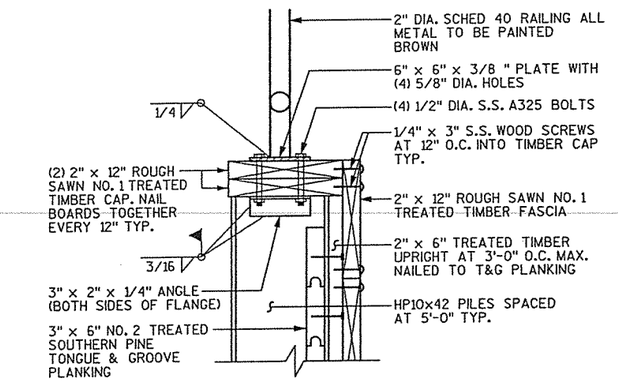

WALL CAP DETAIL

TYP. AT PILES SHOWN

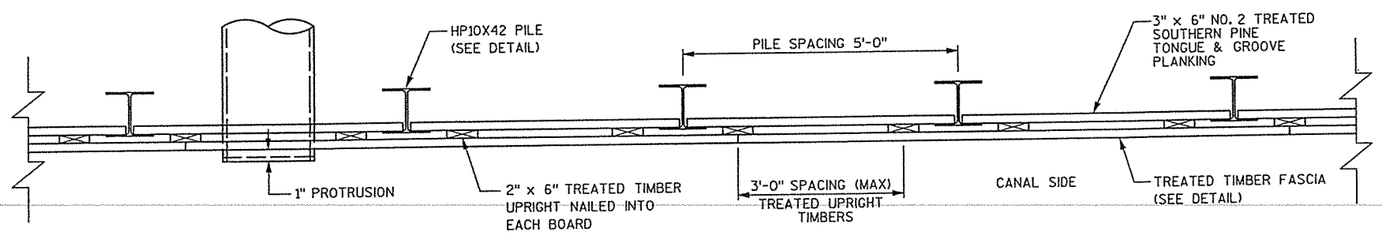

PROPOSED CANITLEVERED SOLDIER PILE REVETMENT WALL PLAN VIEW

STA 9'C'+50 - STA 11'C'+90 : STA 12'C'+01 - STA 14'C'+53

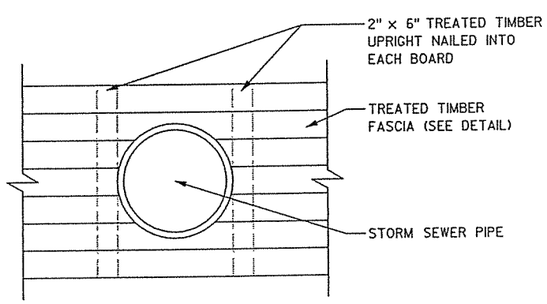

STORM SEWER/PRIVATE DRAIN PENETRATION DETAIL

NOTES:

DRAWING SHALL NOT BE SCALED.

ALL TIMBER CONNECTORS AND HARDWARE SHALL BE INCLUDED IN THE COST FOR BID ITEM "SPV. 0090.07"

UNLESS OTHERWISE NOTED, ALL STEEL IS BARE STEEL.

S.S. = STAINLESS STEEL

⚠ FASCIA AND CAP BOARD MUST REMAIN STRAIGHT.

NO.	DATE	REVISION	BY

STATE OF WISCONSIN
DEPARTMENT OF TRANSPORTATION
DIVISION OF HIGHWAYS

STRUCTURE R-11-26

CONST. SPEC. 2005	DRAWN BY BXJ	PLANS CK'D. GAR

PLAN & TYPICAL SECTION

SHEET 8 OF 11

8

8

FILE= x:\16194-00\02001\TECH\cadd\Final Plans 2005\080608_wd.dgn
SCALE =

PLOT BY : Madison PLOT NAME : ...\Final Plans 2005\080608_wd.dgn Originator : Dist PLOT SCALE : 8.0000 ' / IN. I.D.

STATE PROJECT NUMBER	SHEET NO.
6966-05-07	8.

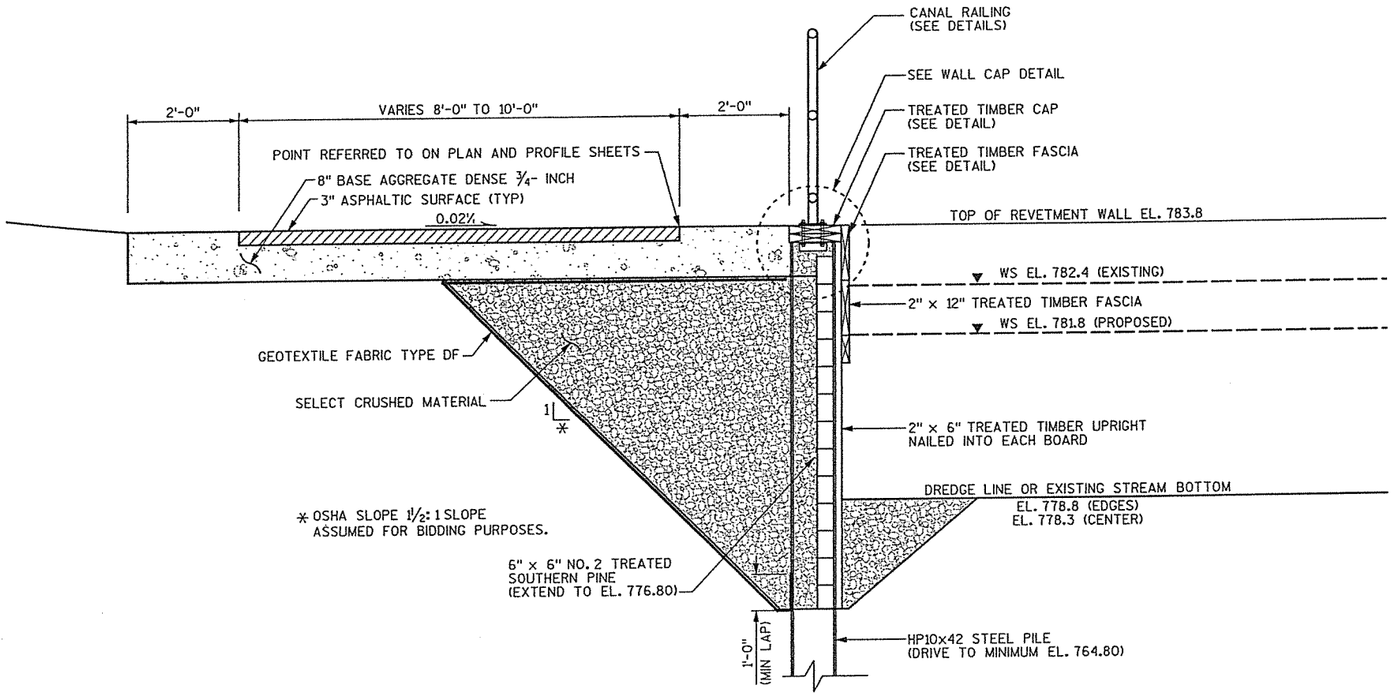

PROPOSED CANITLEVERED SOLDIER PILE REVETMENT WALL SECTION

STA 11'C'+90 - STA 12'C'+01
(LOOKING EAST)

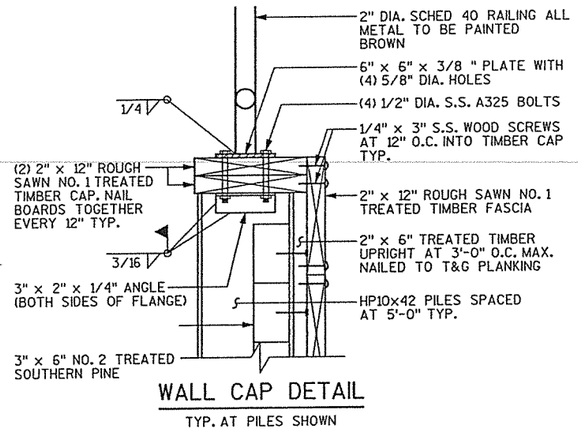

WALL CAP DETAIL

TYP. AT PILES SHOWN

NOTES:

DRAWING SHALL NOT BE SCALED.

ALL TIMBER CONNECTORS AND HARDWARE SHALL BE INCLUDED IN THE COST FOR BID ITEM "SPV. 0090.07"

UNLESS OTHERWISE NOTED, ALL STEEL IS BARE STEEL.

S.S. = STAINLESS STEEL

⚠ FASCIA AND CAP BOARD MUST REMAIN STRAIGHT.

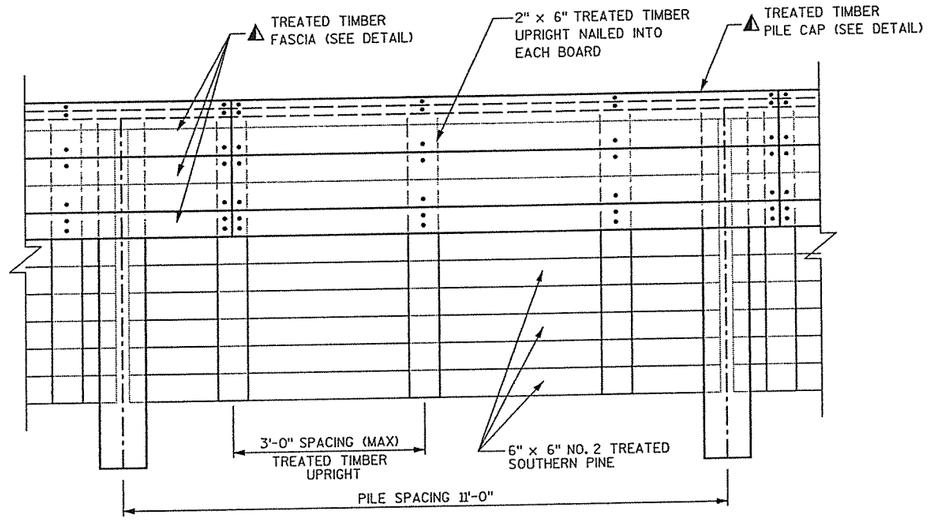

ELEVATION VIEW

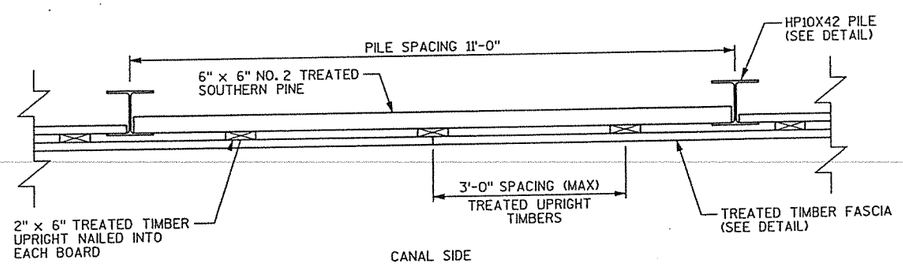

CANAL SIDE

PROPOSED CANITLEVERED SOLDIER PILE REVETMENT WALL PLAN VIEW

STA 11'C'+90 - STA 12'C'+01

NO.	DATE	REVISION	BY

STATE OF WISCONSIN
DEPARTMENT OF TRANSPORTATION
DIVISION OF HIGHWAYS

STRUCTURE R-11-26

CONST. SPEC.	2005	DRAWN BY	BXJ	PLANS CK'D.	GAR

PLAN & TYPICAL SECTION

SHEET 9 OF 11

8

8

FILE = x:\16194-00\02001\TECH\oddNFinal Plans 2005\080609-vd.dgn
SCALE =

STATE PROJECT NUMBER	SHEET NO.
6966-05-07	8.

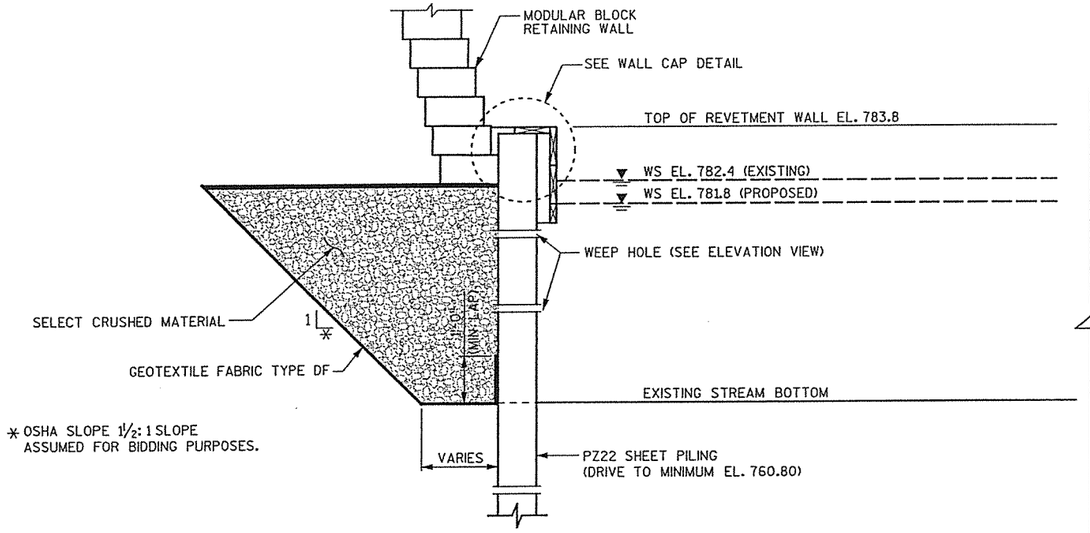

PROPOSED CANTILEVERD SHEET PILE REVETMENT WALL SECTION

STA 15'C'+00 - STA 16'C'+01
(LOOKING EAST)

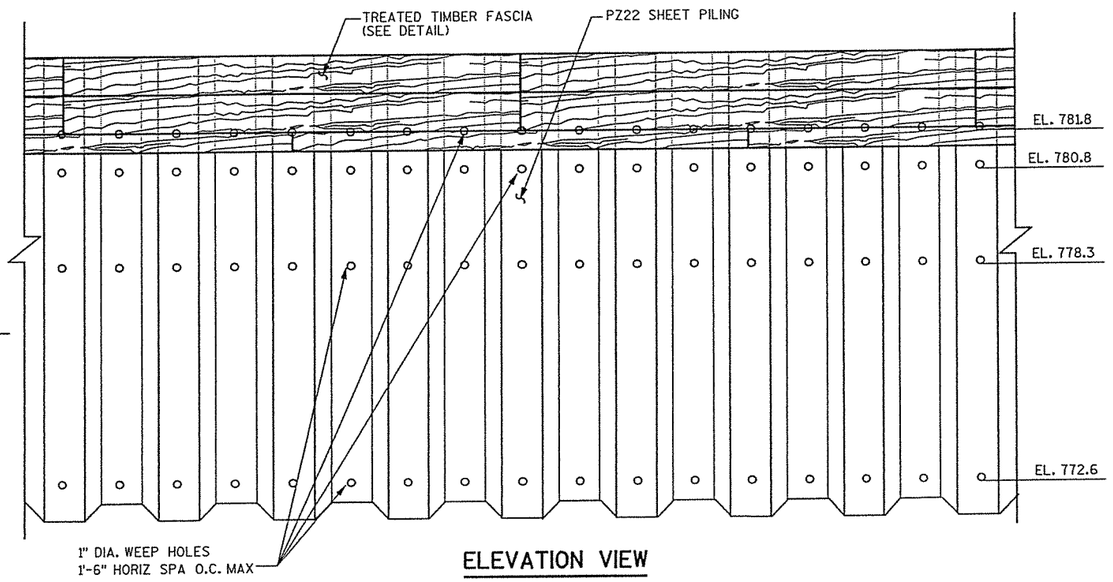

ELEVATION VIEW

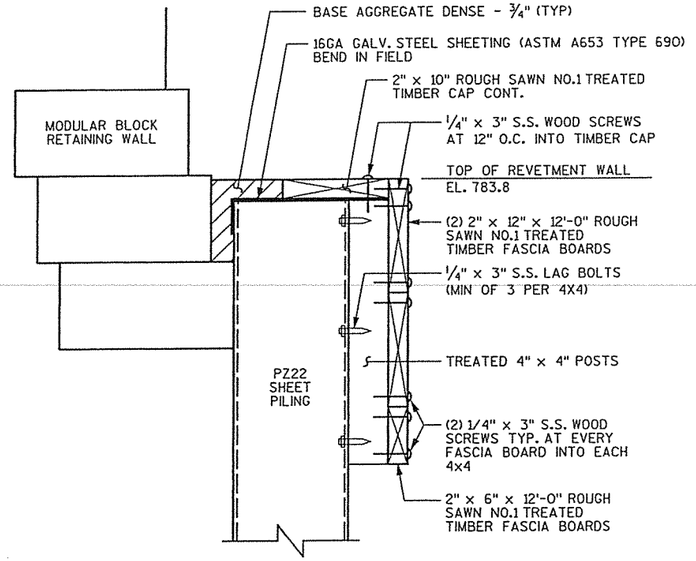

WALL DETAIL

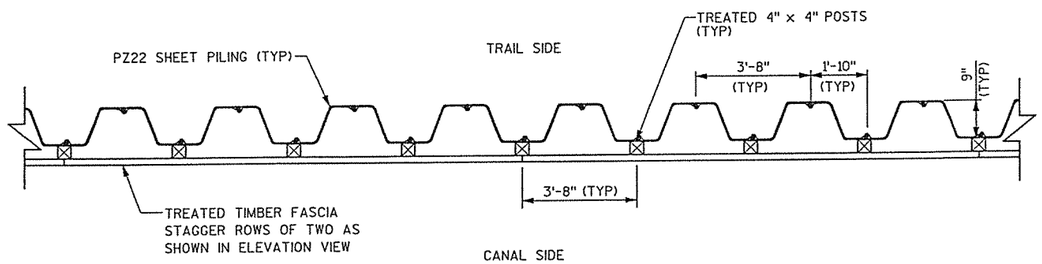

PROPOSED CANTILEVERED SHEET PILE REVETMENT WALL PLAN VIEW

STA 15'C'+00 - STA 16'C'+01

NOTES:

DRAWING SHALL NOT BE SCALED.

ALL TIMBER CONNECTORS AND HARDWARE
SHALL BE INCLUDED IN THE COST FOR BID ITEM "SPV. 0090.07"

UNLESS OTHERWISE NOTED, ALL STEEL IS BARE STEEL.

S.S. = STAINLESS STEEL

FASCIA AND CAP BOARD MUST REMAIN STRAIGHT.

NO.	DATE	REVISION	BY

STATE OF WISCONSIN
DEPARTMENT OF TRANSPORTATION
DIVISION OF HIGHWAYS

STRUCTURE R-11-26

CONST. SPEC. 2005	DRAWN BY BXJ	PLANS CK'D. GAR

PLAN & TYPICAL SECTION

SHEET 10 OF 11

8

8

FILE = X:\16194-00\02001\TECH\cadd\Final Plans 2005\080610_wd.dgn
SCALE =

PLOT DATE : 10/28/2005 PLOT BY : Madison PLOT NAME : ...\Final Plans 2005\080610_wd.dgn Originator : Dist PLOT SCALE : 4.0000 ' / IN. I.D.

STATE PROJECT NUMBER	SHEET NO.
6966-05-07	8.

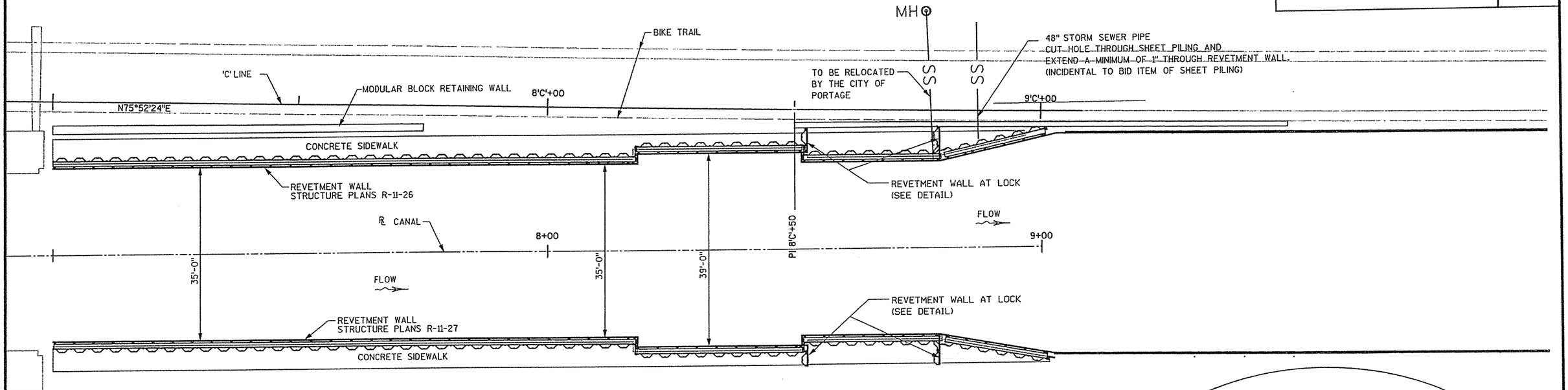

PLAN

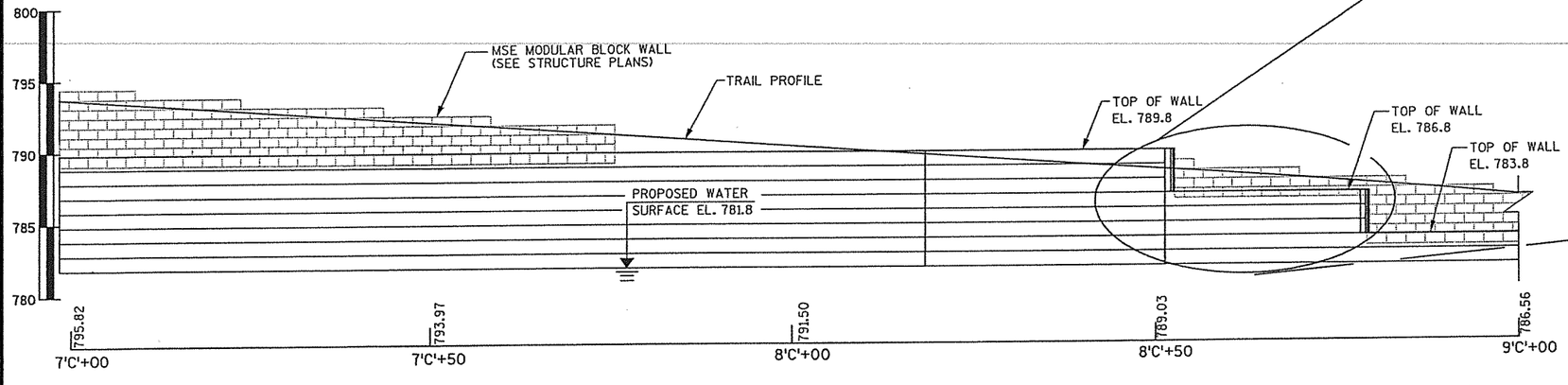

ELEVATION REVETMENT WALLS WISCONSIN RIVER LOCK

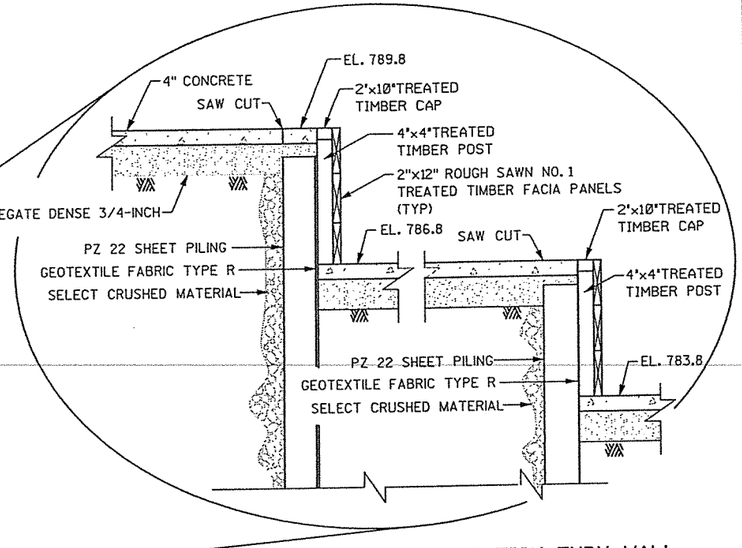

PARTIAL TYPICAL SECTION THRU WALL

SHEET PILE IS PLACED PERPENDICULAR
BETWEEN REVETMENT WALL AND RETAINING WALL

NO.	DATE	REVISION	BY

STATE OF WISCONSIN
DEPARTMENT OF TRANSPORTATION
DIVISION OF HIGHWAYS

STRUCTURE R-11-26

CONST. SPEC.	DRAWN BY	PLANS CK'D.
2005	BXJ	GAR

PLAN & TYPICAL SECTION

SHEET 11 OF 11

8

8

FILE= x:\16194-00\02001\TECH\cadd\Final Plans 2005\080611_wd.dgn
SCALE =

DISTRICT CONTACT:

TYPE CODE = X

STATE PROJECT NUMBER	SHEET NO.
6996-05-07	8.

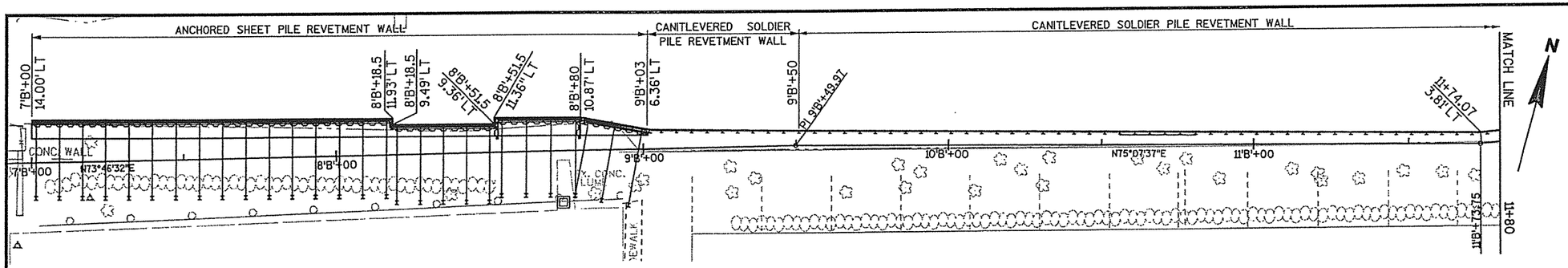

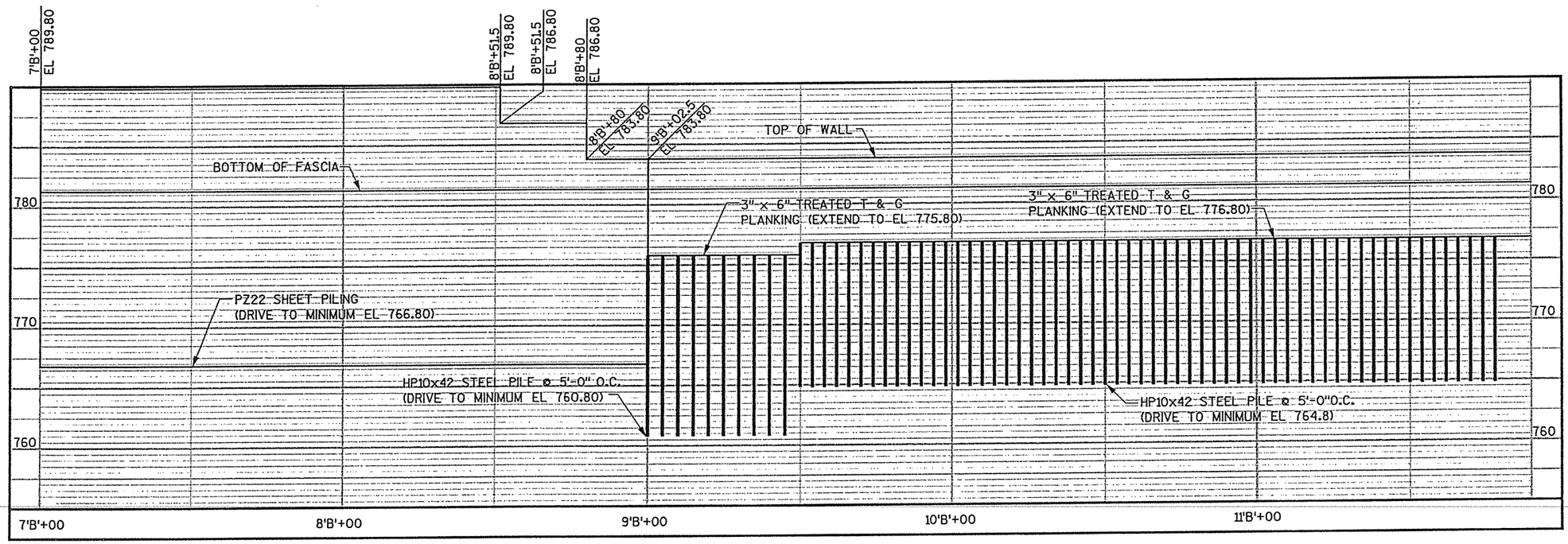

8

8

COMBINATION OF SHEET PILE AND CANTILEVERED SOLDIER PILE REVETMENT WALL

BID ITEMS	UNIT	TOTAL
TREATED LUMBER AND TIMBER	MBM	26
HP10x42 PILING STEEL DELIVERED & DRIVEN	LF	2850
STEEL SHEET PERMANENT PILING DELIVERED & DRIVEN	SF	7245
STRUCTURAL STEEL CARBON (STEEL BRACKETS & WALER)	LB	9200
EXCAVATION FOR STRUCTURES REVETMENT WALL (R-11-27)	LS	1
STEEL TIE-BACK CABLES	EA	28

QUANTITIES ARE FOR INFORMATIONAL PURPOSES ONLY.
ALL PROJECT COSTS ARE PAID FOR UNDER BID ITEM " SPV.0090.08"

DESIGN SOIL PARAMETERS

ELEVATION	SOIL DESCRIPTIONS	SOIL UNIT WEIGHT (pcf)	COHESION (psf)	ANGLE OF INTERNAL FRICTION (DEGREES)
ABOVE 778.8	FILL MATERIAL	130	0	37
BELOW 778.8	NATIVE SOIL	115	0	30

STEEL SHEET PILING REVETMENT WALL OPTION

(SEE SPECIAL PROVISIONS)

BID ITEMS	UNIT	TOTAL
TREATED LUMBER AND TIMBER	MBM	12
HP10x42 PILING STEEL DELIVERED & DRIVEN	LF	476
STEEL SHEET PERMANENT PILING DELIVERED & DRIVEN	SF	10985
STRUCTURAL STEEL CARBON (STEEL BRACKETS & WALER)	LB	9200
EXCAVATION FOR STRUCTURES REVETMENT WALL (R-11-27)	LS	1
STEEL TIE-BACK CABLES	EA	28

QUANTITIES ARE FOR INFORMATIONAL PURPOSES ONLY.
ALL PROJECT COSTS ARE PAID FOR UNDER BID ITEM " SPV.0090.08"

BRIDGE OFFICE CONTACT
FINN HUBBARD
TELEPHONE: (608) 266-8489

CONSULTANT CONTACT
RUSTY CHESMORE , P.E.
TELEPHONE: (608) 273-6380

WISCONSIN
RUSSELL A. CHESMORE
E-26272
VERONA
WI
PROFESSIONAL ENGINEER

Russell A. Chesmore
10/28/05

DESIGN DATA

ULTIMATE DESIGN STRESSES:

HP10x42	F'y = 36 ksi
PZ22 SHEET PILE	F'allow = 23.4 ksi
3" x 6" LUMBER	F'b = 1160 psi
	F'v = 78.5 psi
6" x 6" LUMBER	F'b = 750 psi
	F'v = 78.3 psi
ANCHOR RODS	F'y = 55 ksi
	F'allow = 33 ksi

LIST OF DRAWINGS:

GENERAL PLAN	1
GENERAL PLAN	2
SUBSURFACE EXPLORATION	3
PLAN & TYPICAL SECTIONS	4
PLAN & TYPICAL SECTIONS	5
PLAN & TYPICAL SECTIONS	6
PLAN & TYPICAL SECTIONS	7
PLAN & TYPICAL SECTIONS	8
PLAN & TYPICAL SECTIONS	9
PLAN & TYPICAL SECTIONS	10
REVETMENT WALL DETAILS	11

GENERAL NOTES:

CONSTRUCTION REQUIREMENTS SHALL CONFORM TO STATE OF WISCONSIN STANDARD SPECIFICATIONS.
DRAWINGS SHALL NOT BE SCALED.

SEE CANAL CROSS SECTION SHEETS FOR EXCAVATION LIMITS.

SEE BORING LOG ON SHEET 3 FOR SUBGRADE PROPERTIES.

ALL LUMBER SHALL BE PRESSURE TREATED WITH CHROMATED COPPER ARSENATE AS PER CURRENT STATE AND/OR AASHTO SPECIFICATIONS. ALL LUMBER IS ROUGH CUT UNLESS OTHERWISE NOTED.

ALL CONNECTORS AND HARDWARE SHALL BE GALVANIZED OR STAINLESS STEEL AS SHOWN IN THE DETAILS.

ALL EXISTING ELEVATIONS AND DIMENSIONS TO BE FIELD VERIFIED.

ALL LUMBER CUT OR DRILLED IN FIELD SHALL BE TREATED WITH AN APPROVED PRESERVATIVE.

THIS REVETMENT WALL WAS DESIGNED TO RETAIN THE AMOUNT OF SOIL AS SHOWN ON THESE PLANS. THE DESIGNER SHOULD BE CONSULTED PRIOR TO ANY FUTURE DREDGING OF THE CANAL OR INCREASE IN SURCHARGE OF THE RETAINED SOIL.

F.F. - FRONT FACE B.F. - BACK FACE.

NO.	DATE	REVISION	BY

MEAD & HUNT
ENGINEERS
ARCHITECTS
SCIENTISTS
PLANNERS

STATE OF WISCONSIN
DEPARTMENT OF TRANSPORTATION
DIVISION OF HIGHWAYS

STRUCTURE R-11-27

REVETMENT WALL ALONG PORTAGE CANAL

COUNTY	COLUMBIA	~~TOWN/CITY/VILLAGE~~	PORTAGE
DESIGN SPEC.	AASHTO 2005	LOAD	N/A
CONST. SPEC.	2005		
DESIGNED BY	JAA	DESIGN CK'D.	JFR
DRAWN BY	WAK	PLANS CK'D.	JFR/GAR

APPROVED _____ DATE _____
CHIEF STRUCTURAL DESIGN ENGINEER

GENERAL PLAN

SHEET 1 OF 11

DATE:

FILE =
SCALE =

DISTRICT CONTACT:

TYPE CODE = X

STATE PROJECT NUMBER	SHEET NO.
6996-05-07	8.

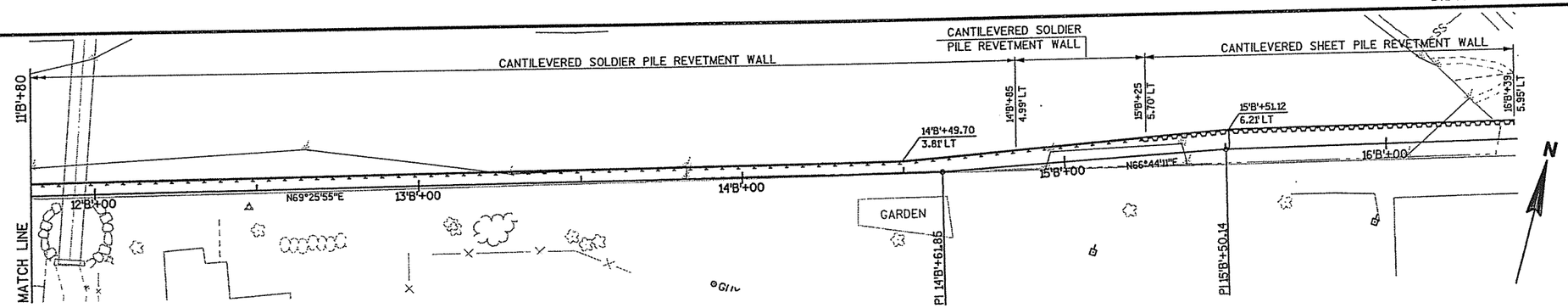

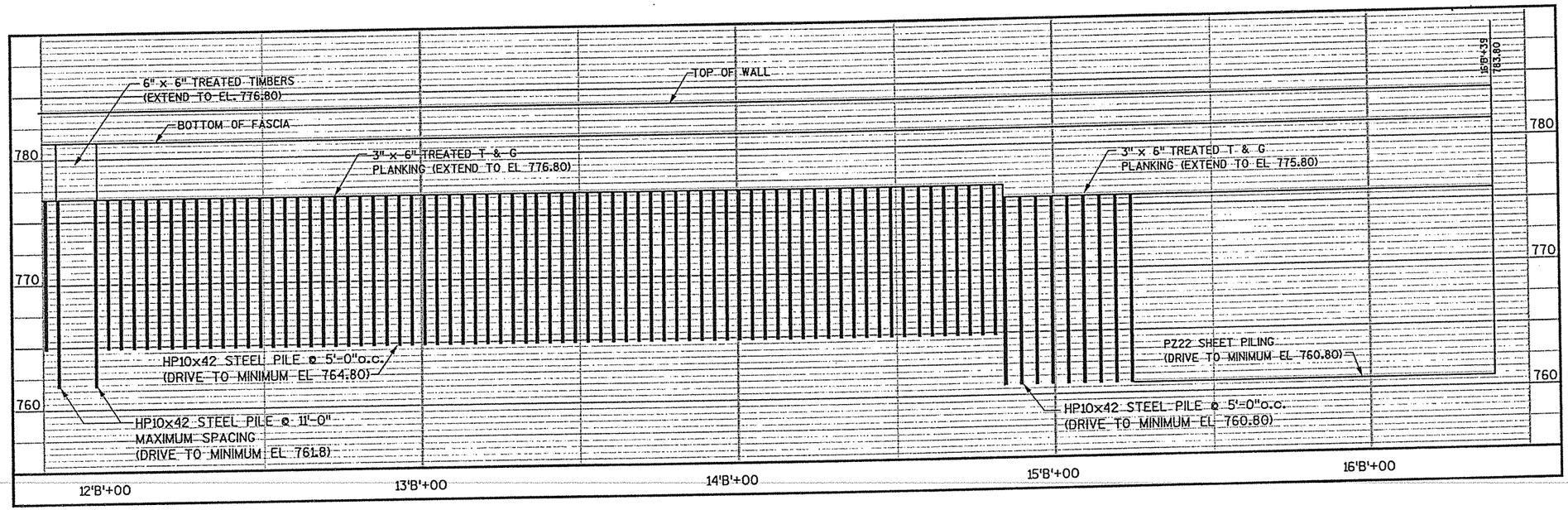

DESIGN SOIL PARAMETERS

ELEVATION	SOIL DESCRIPTIONS	SOIL UNIT WEIGHT (pcf)	COHESION (psf)	ANGLE OF INTERNAL FRICTION (DEGREES)
ABOVE 778.8	FILL MATERIAL	130	0	37
BELOW 778.8	NATIVE SOIL	115	0	30

BRIDGE OFFICE CONTACT
FINN HUBBARD
TELEPHONE: (608) 266-8489

CONSULTANT CONTACT
GARY RUCHTI, P.E.
TELEPHONE: (608) 273-6380

NO.	DATE	REVISION	BY

MEAD & HUNT — ENGINEERS ARCHITECTS SCIENTISTS PLANNERS

STATE OF WISCONSIN
DEPARTMENT OF TRANSPORTATION
DIVISION OF HIGHWAYS

STRUCTURE R-11-27

REVETMENT WALL ALONG PORTAGE CANAL

COUNTY	~~TOWN/CITY/VILLAGE~~	
COLUMBIA	PORTAGE	
DESIGN SPEC. AASHTO 2005	LOAD N/A	CONST. SPEC. 2005
DESIGNED BY JAA / DESIGN CK'D. JFR	DRAWN BY WAK	PLANS CK'D. JFR/GAR

APPROVED _____ CHIEF STRUCTURAL DESIGN ENGINEER _____ DATE

GENERAL PLAN

SHEET 2 OF 11

DATE:

FILE=

SCALE =

8

8

STATE PROJECT NUMBER	SHEET NO.
6996-05-07	8.

BORINGS BY:
SOILS & ENGINEERING SERVICES, INC.
MADISON, WI
JULY 8, 2004

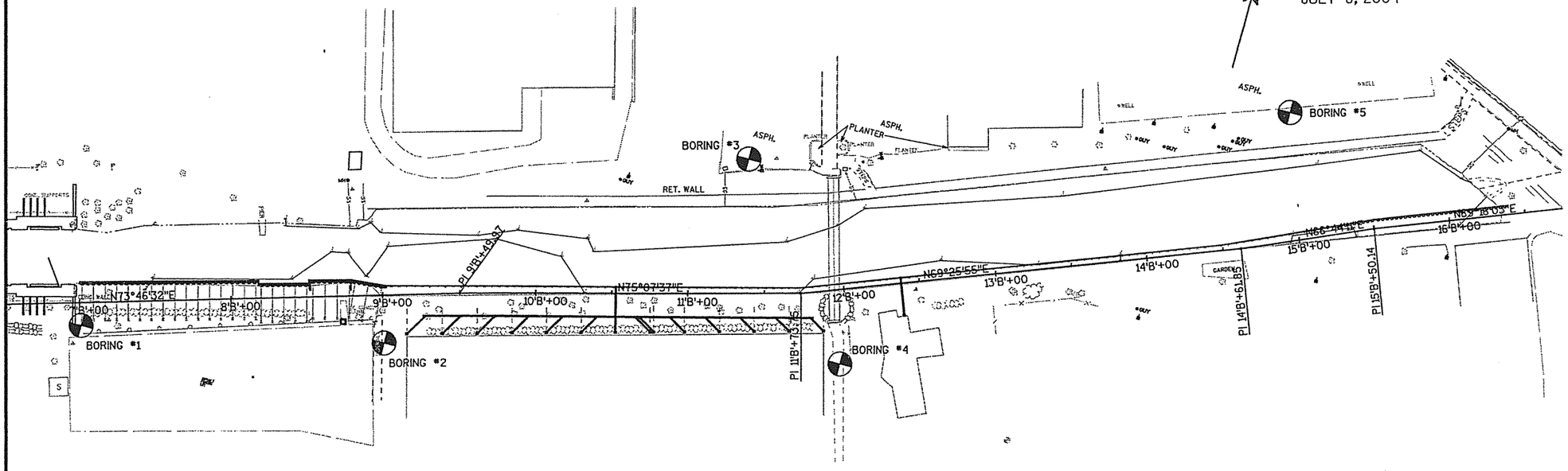

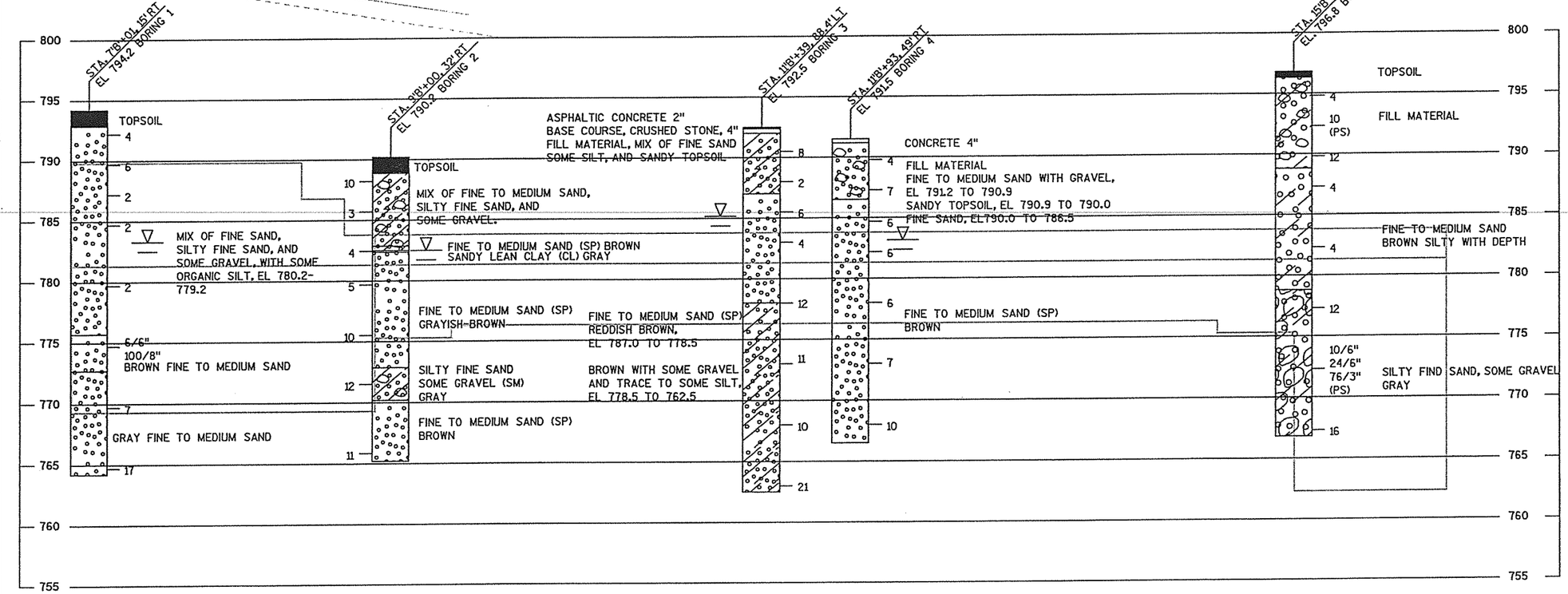

ABBREVIATIONS

F— FINE M— MEDIUM C— COARSE
WS— WEATHERED SO— SOUND

MATERIAL SYMBOLS

TOPSOIL, SILT, SANDSTONE
SAND, PEAT, LIMESTONE
GRAVEL, CLAY, IGNEOUS ROCK

LEGEND OF PROBING

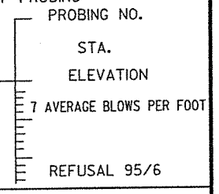

95/6=95 BLOWS FOR 6" PENETRATION
PROBING TAKEN WITH A 350#WT.
FALLING 18" ON A 2" O.D. POINT.

LEGEND OF BORING

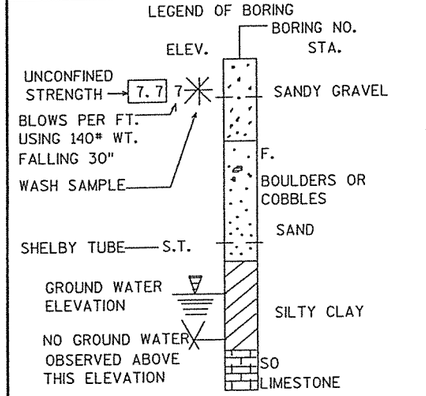

UNLESS OTHERWISE SPECIFIED, THE BLOWS PER FOOT AT THE LOCATIONS INDICATED ARE BASED ON DRIVING A O.D.X1 4" I.D. SPLIT SPOON SAMPLER WITH A 140# HAMMER HAVING A FREE FALL OF 30". THE BLOW COUNT IS TAKEN IN UNDISTURBED SOIL IMMEDIATELY BELOW A CASED OR OPEN HOLE ELIMINATING SIDE FRICTION ON THE DRIVE PIPE.

SUBSURFACE EXPLORATION FOR FOUNDATION DESIGN AND BIDDERS INFORMATION

TO OBTAIN RELATIVE DATA CONCERNING THE CHARACTER OF MATERIAL IN AND UPON WHICH THE FOUNDATION MIGHT BE BUILT, BORINGS AND/OR SOUNDINGS WERE MADE AT POINTS APPROXIMATELY AS INDICATED ON THIS DRAWING. THE DATA PRESENTED HEREIN REPRESENTS THE FINDINGS OF THE SUBSURFACE EXPLORATIONS MADE. HOWEVER, BECAUSE THE DEPTHS INVESTIGATED ARE LIMITED AND THE AREA OF THE BORINGS AND/OR SOUNDINGS IS VERY SMALL IN RELATION TO THE ENTIRE AREA, THE DIVISION OF HIGHWAYS DOES NOT WARRANT CONDITIONS BELOW THE DEPTHS INVESTIGATED OR THAT THE CLASSIFICATION OF MATERIAL ENCOUNTERED IN THESE INVESTIGATIONS IS NECESSARILY TYPICAL OF THE ENTIRE SITE.

NO.	DATE	REVISION	BY

STATE OF WISCONSIN
DEPARTMENT OF TRANSPORTATION
DIVISION OF HIGHWAYS

STRUCTURE R-11-27

CONST. SPEC. 2005	DRAWN BY WAK	PLANS CK'D. JFR/GAR

SUBSURFACE EXPLORATION

SHEET 3 OF 11

8

8

FILE=
SCALE =

PLOT NAME : ... Originator : Dist
PLOT SCALE : 80.00 ' / IN.
I.D.

STATE PROJECT NUMBER	SHEET NO.
6966-05-07	8.

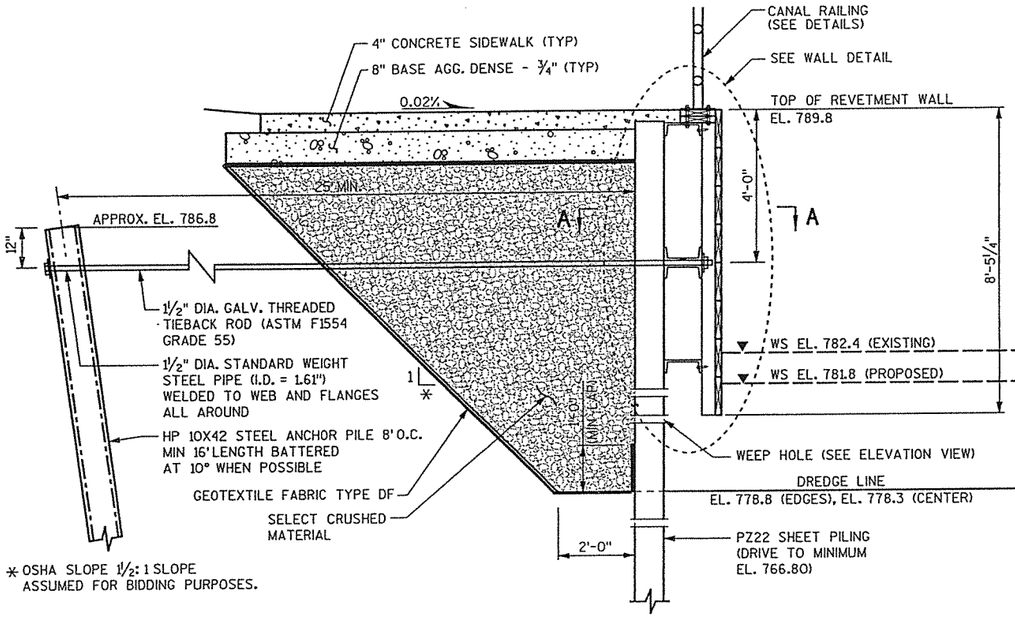

PROPOSED ANCHORED SHEET PILE REVETMENT WALL SECTION

STA 7'B'+00 - STA 8'B'+51.5
(LOOKING WEST)

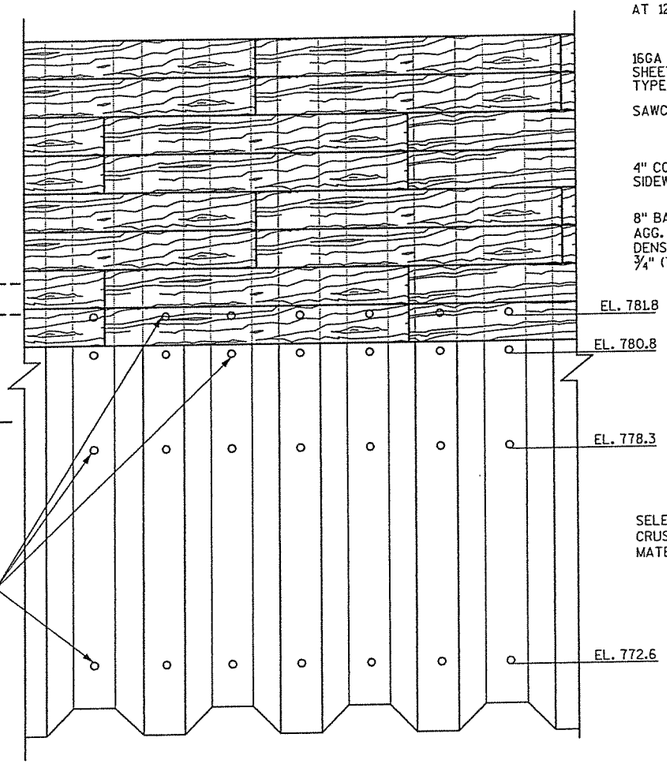

ELEVATION VIEW

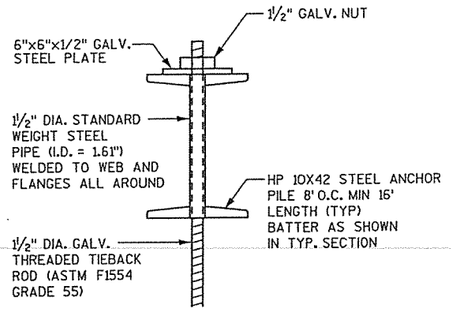

ANCHOR DETAIL

NOTES:

DRAWING SHALL NOT BE SCALED.

ALL TIMBER CONNECTORS AND HARDWARE SHALL BE INCLUDED IN THE COST FOR BID ITEM "SPV.0090.08"

UNLESS OTHERWISE NOTED, ALL STEEL IS BARE STEEL.

S.S. = STAINLESS STEEL

ALL GALVANIZED STEEL SHALL BE HOT-DIP GALVANIZED IN ACCORDANCE WITH ASTM SPECIFICATION A153.

WALERS, TIE RODS, NUTS, AND WASHERS SHALL BE INCLUDED IN THE COST FOR BID ITEM "STRUCTURAL CARBON STEEL".

FASCIA AND CAP BOARD MUST REMAIN STRAIGHT.

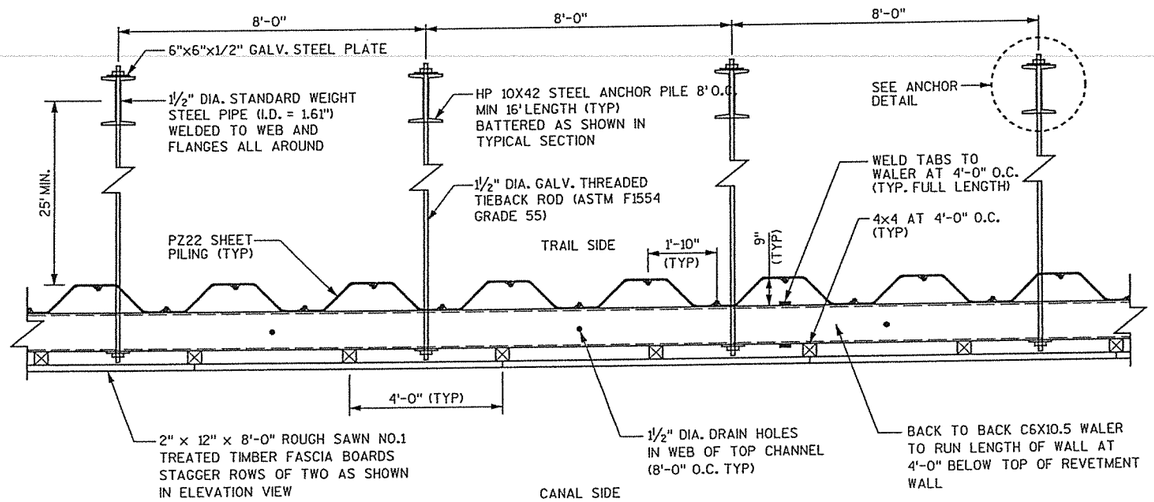

PROPOSED ANCHORED SHEET PILE REVETMENT WALL PLAN A-A

STA 7'B'+00 - STA 8'B'+51.5

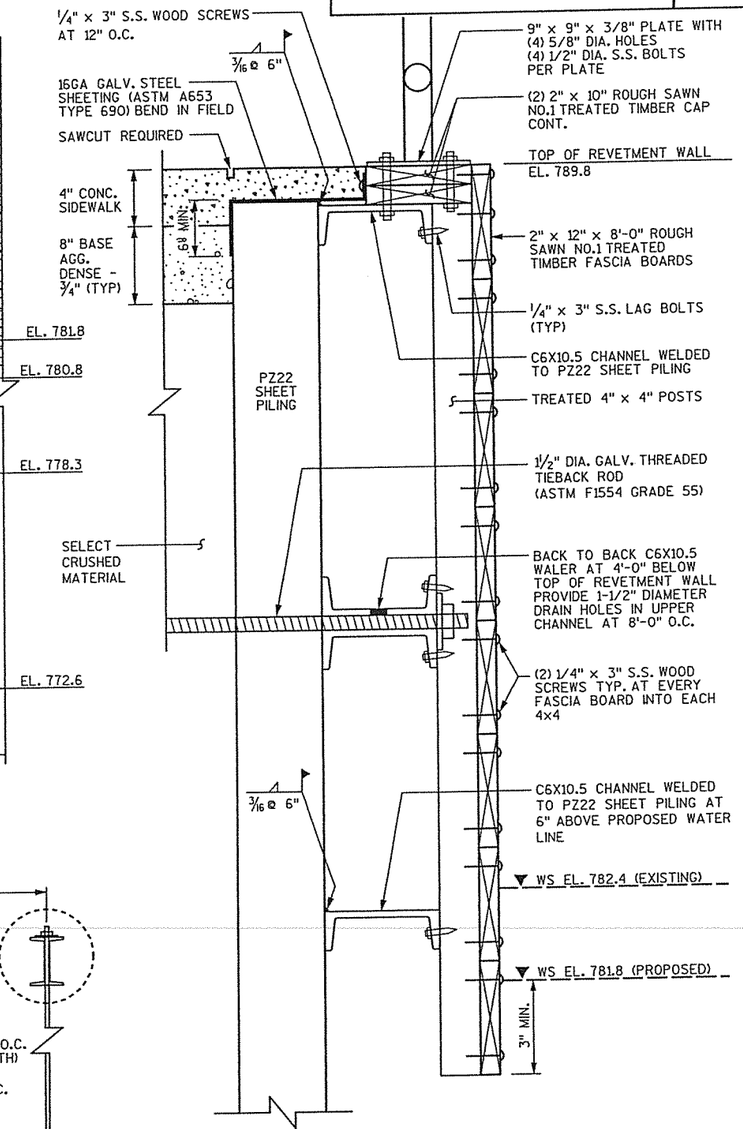

WALL DETAIL

NO.	DATE	REVISION	BY

STATE OF WISCONSIN
DEPARTMENT OF TRANSPORTATION
DIVISION OF HIGHWAYS

STRUCTURE R-11-27

CONST. SPEC.	2005	DRAWN BY	BXJ	PLANS CK'D.	GAR

PLAN & TYPICAL SECTION

SHEET 4 OF 11

8

8

FILE= x:\16194-00\02001\TECH\cadd\Final Plans 2005\080704_wd.dgn
SCALE =

STATE PROJECT NUMBER	SHEET NO.
6966-05-07	8.

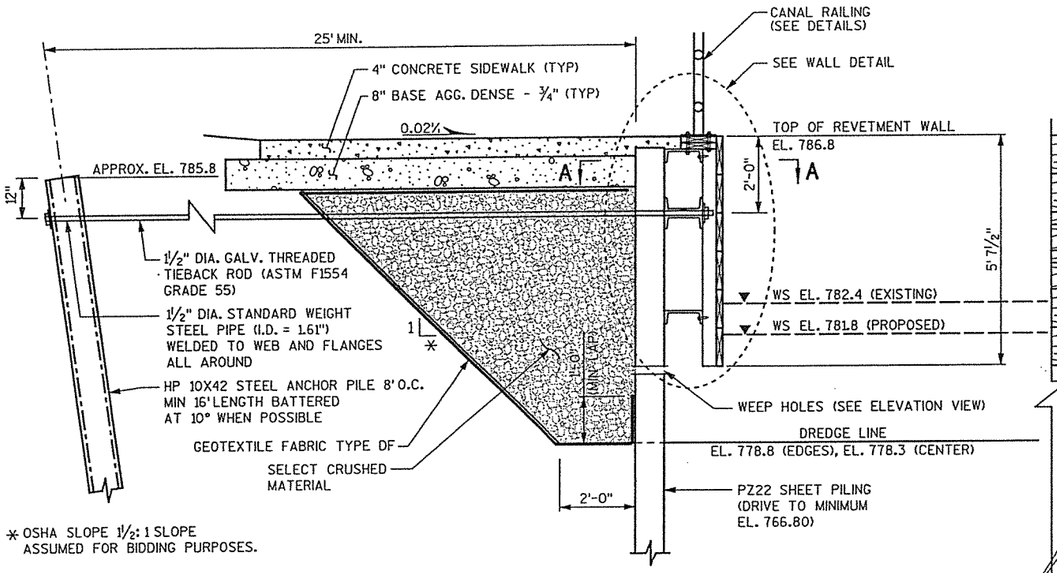

* OSHA SLOPE 1½:1 SLOPE ASSUMED FOR BIDDING PURPOSES.

PROPOSED ANCHORED SHEET PILE REVETMENT WALL SECTION

STA 8'B'+51.5 - STA 8'B'+80
(LOOKING WEST)

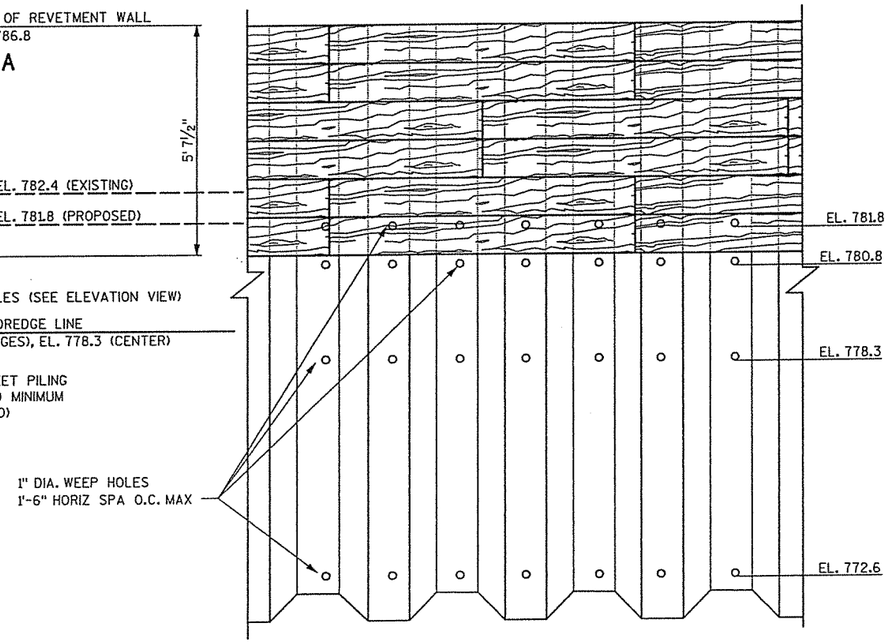

ELEVATION VIEW

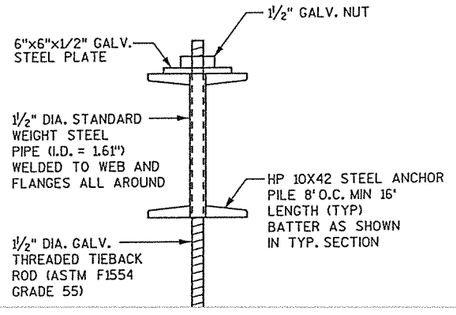

ANCHOR DETAIL

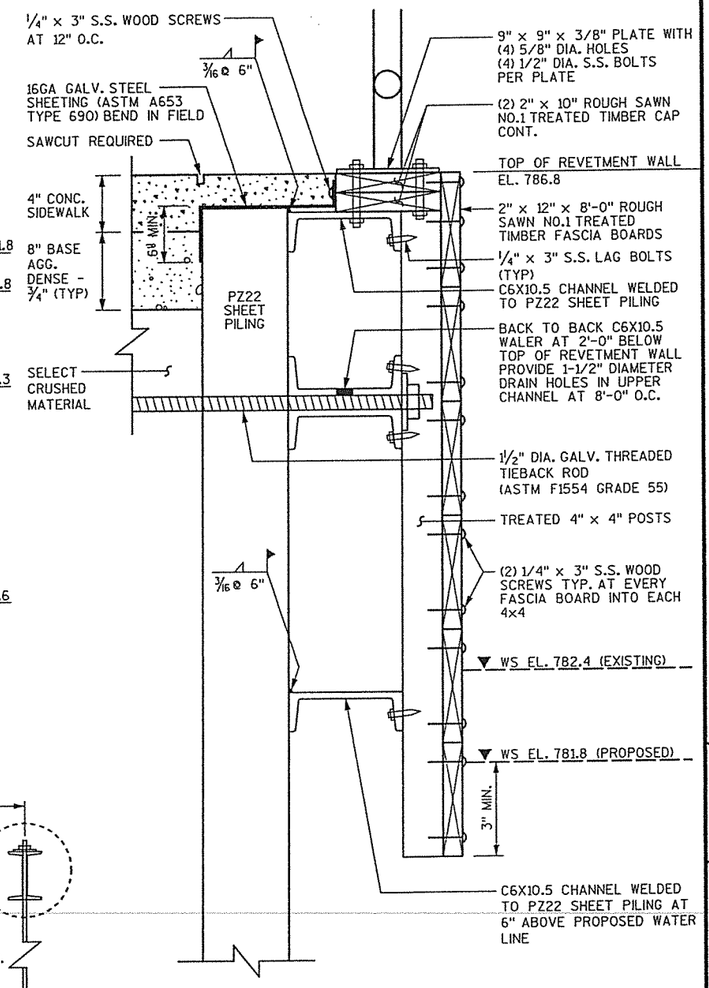

WALL DETAIL

NOTES:

DRAWING SHALL NOT BE SCALED.

ALL TIMBER CONNECTORS AND HARDWARE SHALL BE INCLUDED IN THE COST FOR BID ITEM "SPV.0090.08"

UNLESS OTHERWISE NOTED, ALL STEEL IS BARE STEEL.

S.S. = STAINLESS STEEL

ALL GALVANIZED STEEL SHALL BE HOT-DIP GALVANIZED IN ACCORDANCE WITH ASTM SPECIFICATION A153.

WALERS, TIE RODS, NUTS, AND WASHERS SHALL BE INCLUDED IN THE COST FOR BID ITEM "STRUCTURAL CARBON STEEL".

FASCIA AND CAP BOARD MUST REMAIN STRAIGHT.

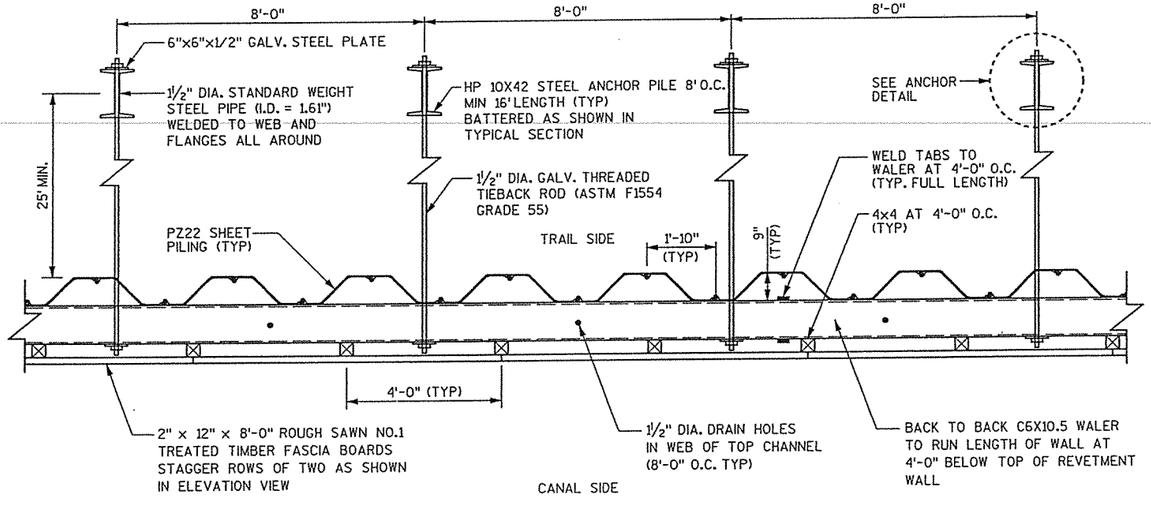

PROPOSED ANCHORED SHEET PILE REVETMENT WALL PLAN A-A

STA 8'B'+51.5 - STA 8'B'+80

NO.	DATE	REVISION	BY

STATE OF WISCONSIN
DEPARTMENT OF TRANSPORTATION
DIVISION OF HIGHWAYS

STRUCTURE R-11-27

CONST. SPEC. 2005	DRAWN BY BXJ	PLANS CK'D. GAR

PLAN & TYPICAL SECTION

SHEET 5 OF 11

8

8

FILE= x:\16194-00\02001\TECH\eddy\Final Plans 2005\080705_wd.dgn
SCALE =

PLOT NAME : ...\Final Plans 2005\...TH.dgn Originator : Dist
PLOT SCALE : 4.0000 ' / IN. I.D.

STATE PROJECT NUMBER	SHEET NO.
6966-05-07	8.

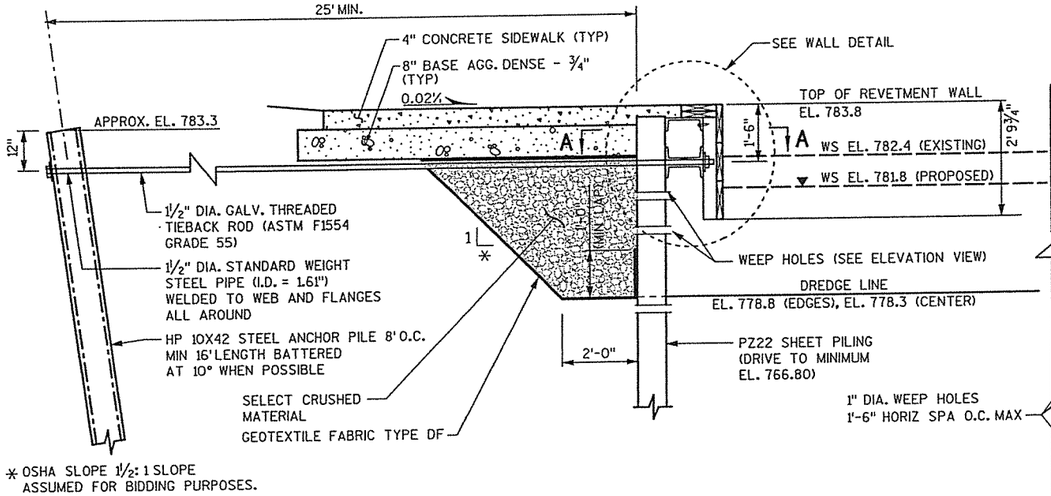

* OSHA SLOPE 1½: 1 SLOPE ASSUMED FOR BIDDING PURPOSES.

PROPOSED ANCHORED SHEET PILE REVETMENT WALL SECTION

STA 8'B'+80 - STA 9'B'+03
(LOOKING WEST)

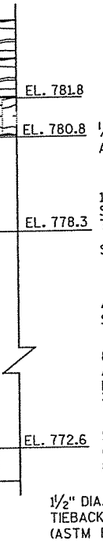

ELEVATION VIEW

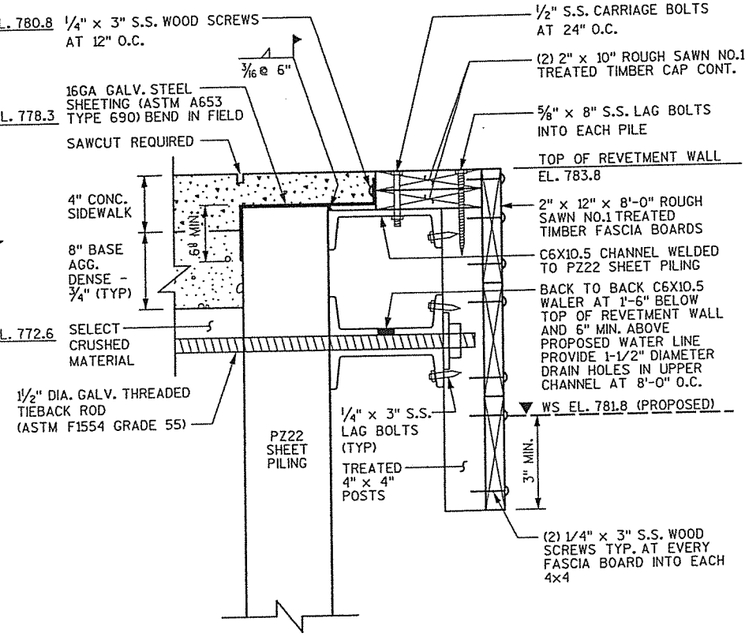

WALL DETAIL

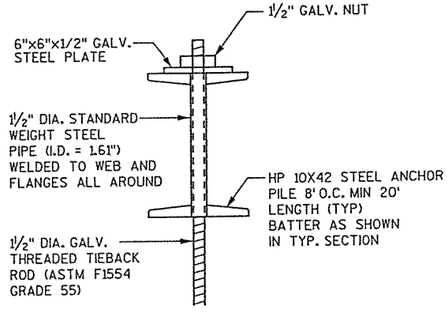

ANCHOR DETAIL

NOTES:

DRAWING SHALL NOT BE SCALED.

ALL TIMBER CONNECTORS AND HARDWARE SHALL BE INCLUDED IN THE COST FOR BID ITEM "SPV.0090.08"

UNLESS OTHERWISE NOTED, ALL STEEL IS BARE STEEL.

S.S. = STAINLESS STEEL

ALL GALVANIZED STEEL SHALL BE HOT-DIP GALVANIZED IN ACCORDANCE WITH ASTM SPECIFICATION A153.

WALERS, TIE RODS, NUTS, AND WASHERS SHALL BE INCLUDED IN THE COST FOR BID ITEM "STRUCTURAL CARBON STEEL".

FASCIA AND CAP BOARD MUST REMAIN STRAIGHT.

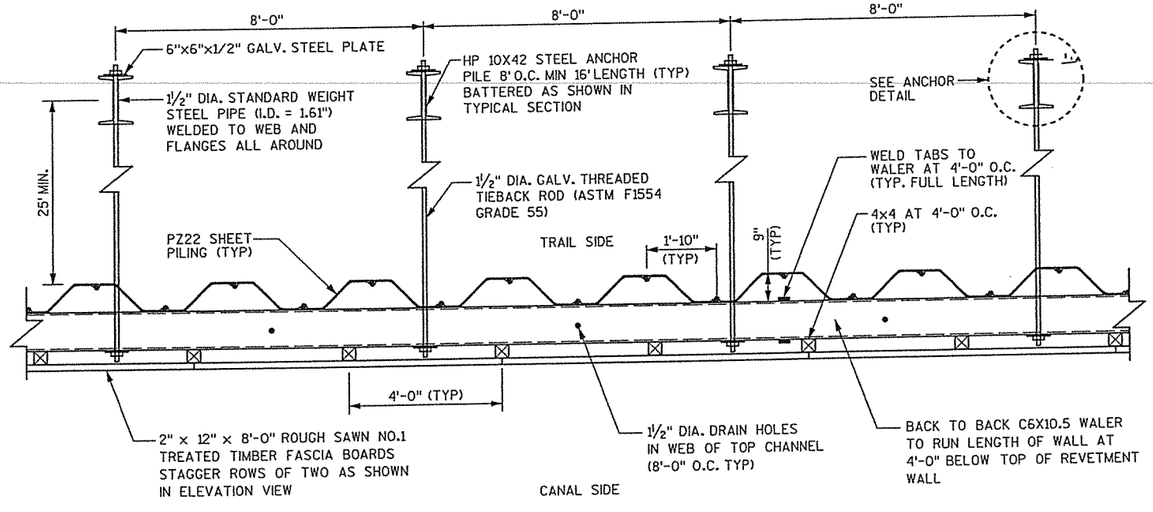

PROPOSED ANCHORED SHEET PILE REVETMENT WALL PLAN A-A

STA 8'B'+80 - STA 9'B'+03

NO.	DATE	REVISION	BY

STATE OF WISCONSIN
DEPARTMENT OF TRANSPORTATION
DIVISION OF HIGHWAYS

STRUCTURE R-11-27

CONST. SPEC.	2005	DRAWN BY	BXJ	PLANS CK'D.	GAR

PLAN & TYPICAL SECTION

SHEET 6 OF 11

8

FILE= X:\16194-00\02001\TECH\cadd\Final Plans 2005\080706_wd.dgn
SCALE =

STATE PROJECT NUMBER	SHEET NO.
6966-05-07	8.

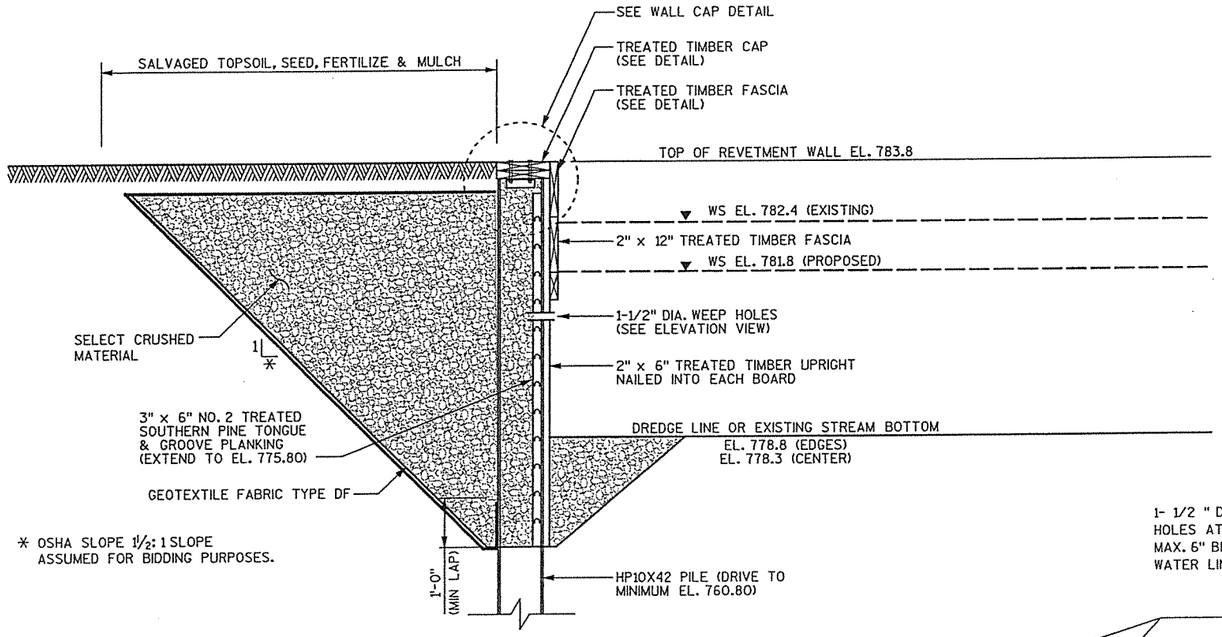

PROPOSED CANTILEVERD SOLDIER PILE REVETMENT WALL SECTION

STA 9'B'+03 - STA 9'B'+50 : STA 14'B'+85 - STA 15'B'+25
(LOOKING WEST)

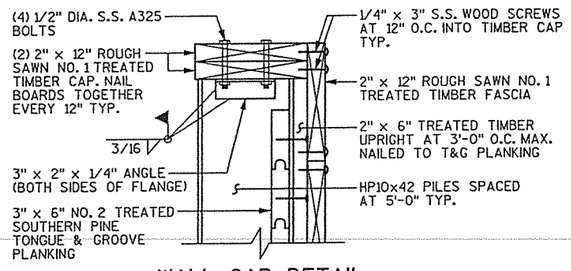

WALL CAP DETAIL

TYP. AT PILES SHOWN

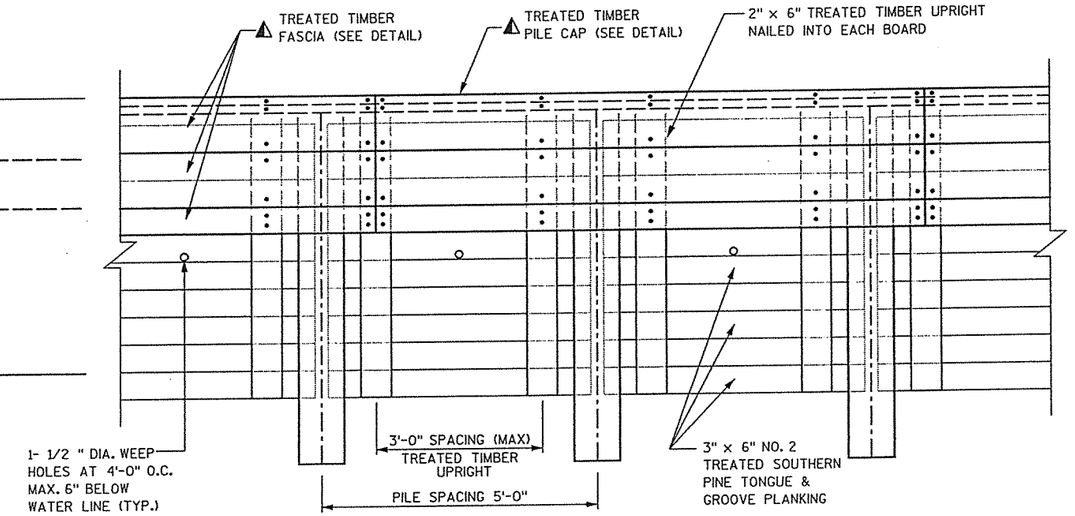

ELEVATION VIEW

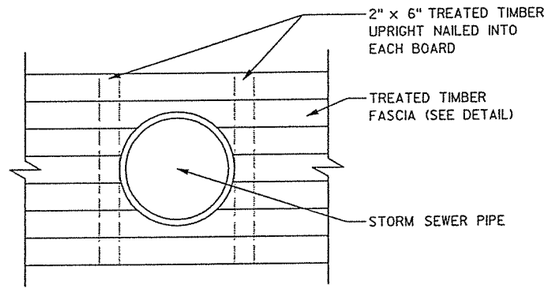

STORM SEWER/PRIVATE DRAIN PENETRATION DETAIL

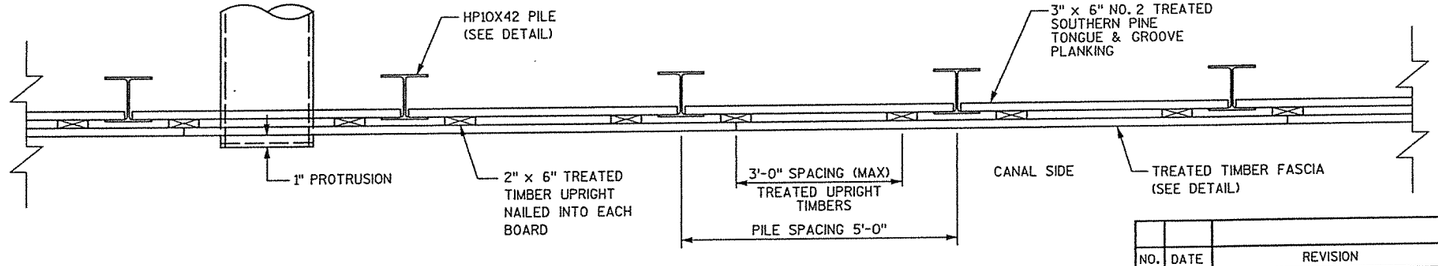

PROPOSED CANTILEVERD SOLDIER PILE REVETMENT WALL PLAN VIEW

STA 9'B'+03 - STA 9'B'+50 : STA 14'B'+85 - STA 15'B'+25

NOTES:

DRAWING SHALL NOT BE SCALED.

ALL TIMBER CONNECTORS AND HARDWARE SHALL BE INCLUDED IN THE COST FOR BID ITEM "SPV.0090.08"

UNLESS OTHERWISE NOTED, ALL STEEL IS BARE STEEL.

S.S. = STAINLESS STEEL

⚠ FASCIA AND CAP BOARD MUST REMAIN STRAIGHT.

NO.	DATE	REVISION	BY

STATE OF WISCONSIN
DEPARTMENT OF TRANSPORTATION
DIVISION OF HIGHWAYS

STRUCTURE R-11-27

CONST. SPEC.	2005	DRAWN BY	BXJ	PLANS CK'D.	GAR

PLAN & TYPICAL SECTIONS

SHEET 7 OF 11

8

8

FILE= x:\16194-00\02001\TECH\addnFinal Plans 2005\080707_wd.dgn
SCALE =

PLOT NAME : \Final Plans 2005\080707_wd.dgn Originator : Dist PLOT SCALE : 8.0000 ' / IN. I.D.

STATE PROJECT NUMBER	SHEET NO.
6966-05-07	8.

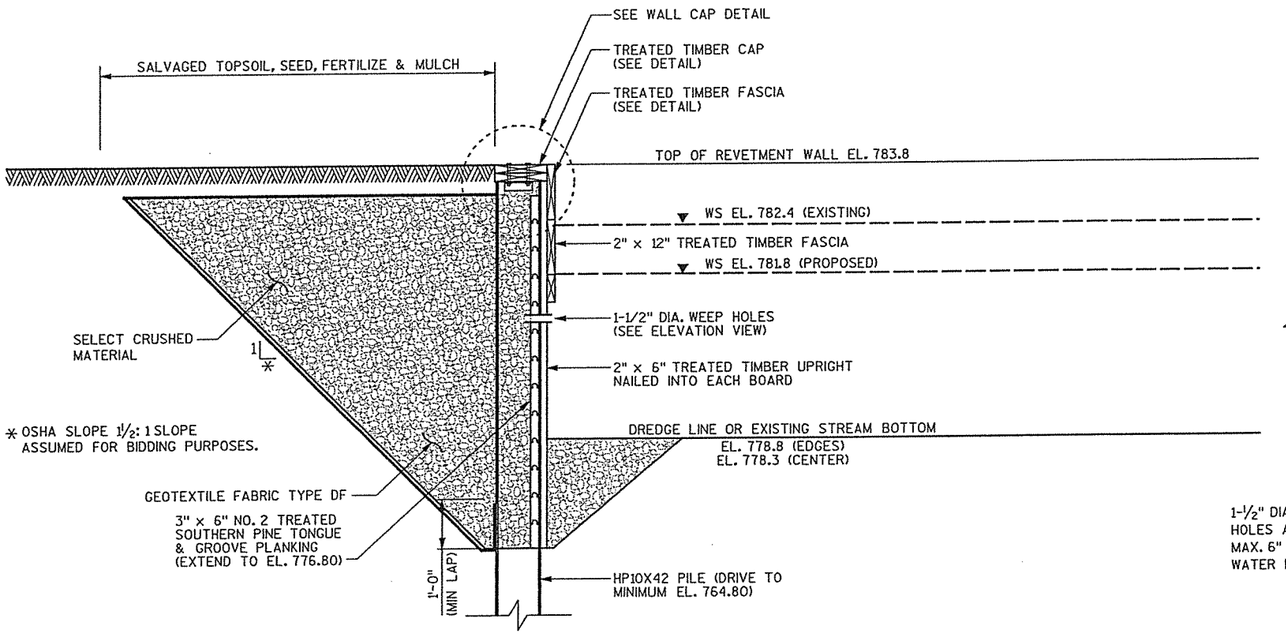

PROPOSED CANTILEVERED SOLDIER PILE REVETMENT WALL SECTION

STA 9'B'+50 - STA 11'B'+90 : STA 12'B'+01 - STA 14'B'+85
(LOOKING WEST)

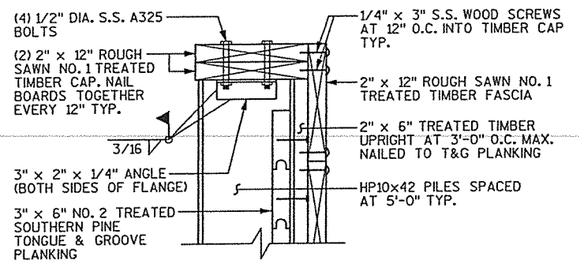

WALL CAP DETAIL

TYP. AT PILES SHOWN

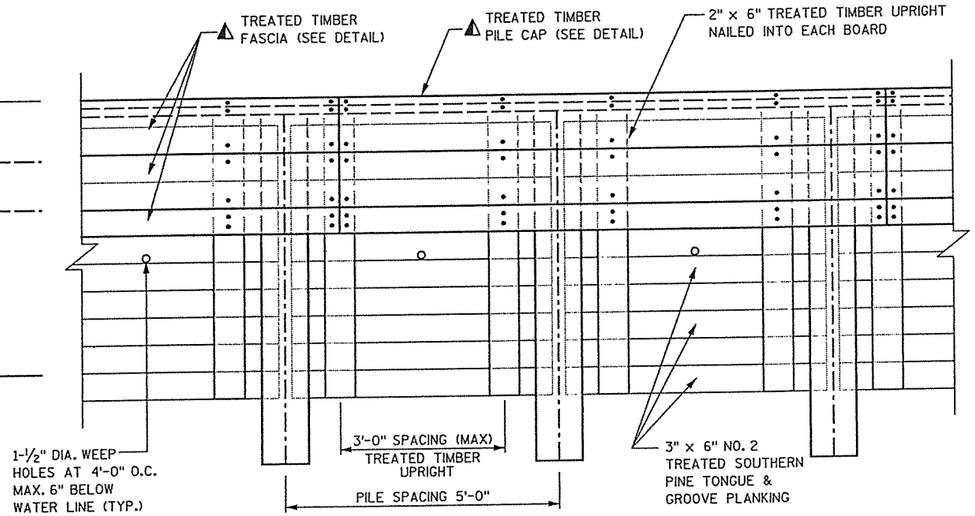

ELEVATION VIEW

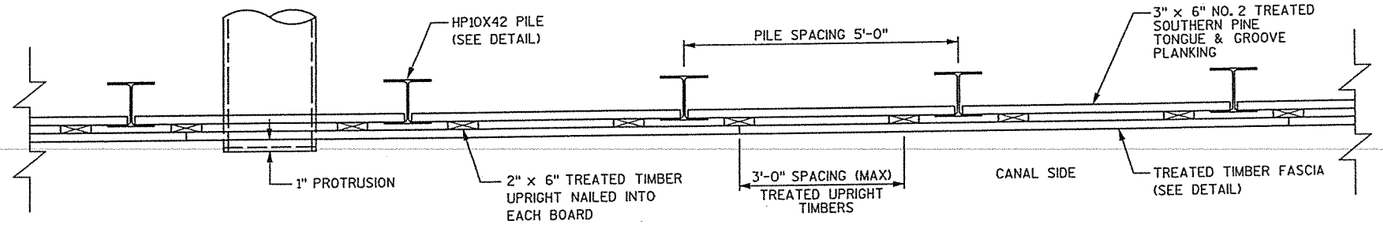

PROPOSED CANTILEVERED SOLDIER PILE REVETMENT WALL PLAN VIEW

STA 9'B'+50 - STA 11'B'+90 : STA 12'B'+01 - STA 14'B'+85

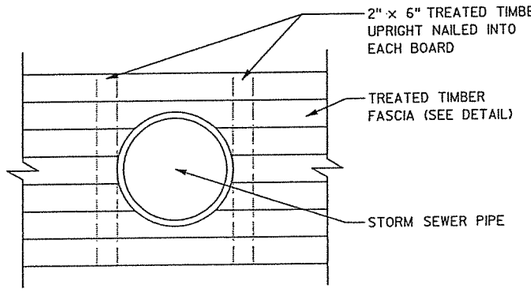

STORM SEWER/PRIVATE DRAIN PENETRATION DETAIL

NOTES:

DRAWING SHALL NOT BE SCALED.

ALL TIMBER CONNECTORS AND HARDWARE SHALL BE INCLUDED IN THE COST FOR BID ITEM "SPV.0090.08"

UNLESS OTHERWISE NOTED, ALL STEEL IS BARE STEEL.

S.S. = STAINLESS STEEL

⚠ FASCIA AND CAP BOARD MUST REMAIN STRAIGHT.

NO.	DATE	REVISION	BY

STATE OF WISCONSIN
DEPARTMENT OF TRANSPORTATION
DIVISION OF HIGHWAYS

STRUCTURE R-11-27

CONST. SPEC.	2005	DRAWN BY	BXJ	PLANS CK'D.	GAR

PLAN & TYPICAL SECTION

SHEET 8 OF 11

8

8

FILE= x:\16194-00\02001\TECH\coddFinal Plans 2005\080708_wd.dgn
SCALE =

STATE PROJECT NUMBER	SHEET NO.
6966-05-07	8.

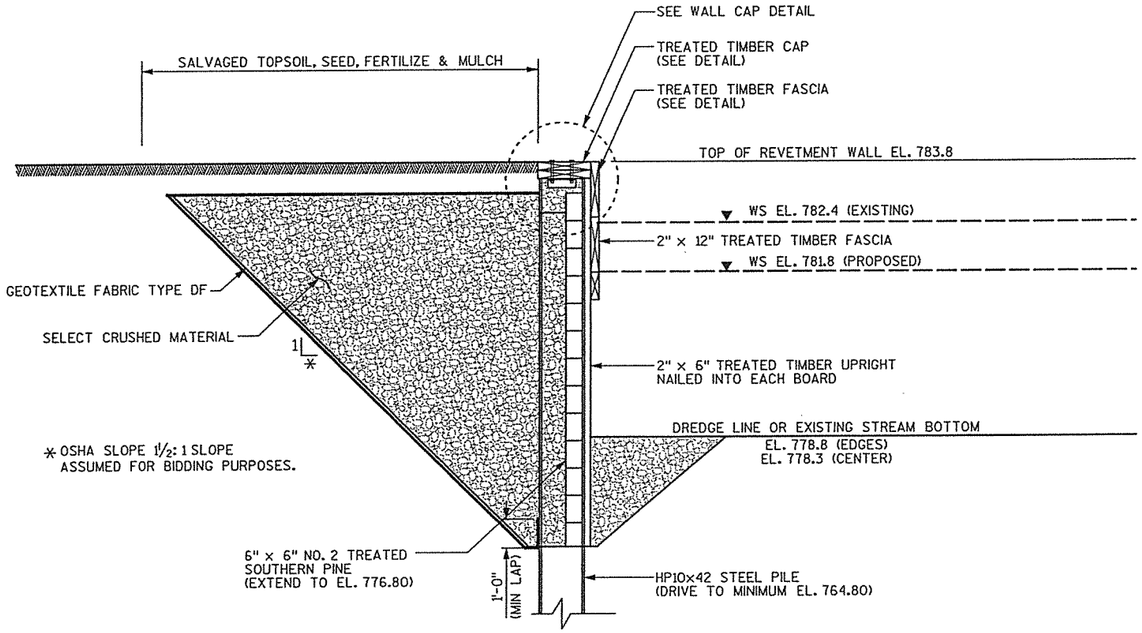

PROPOSED CANITLEVERED SOLDIER PILE REVETMENT WALL SECTION

STA 11'B'+90 - STA 12'B'+01
(LOOKING EAST)

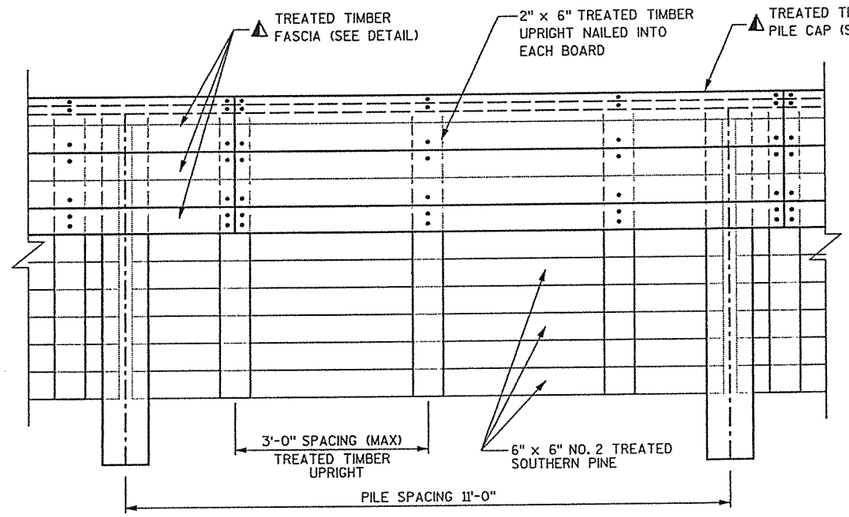

ELEVATION VIEW

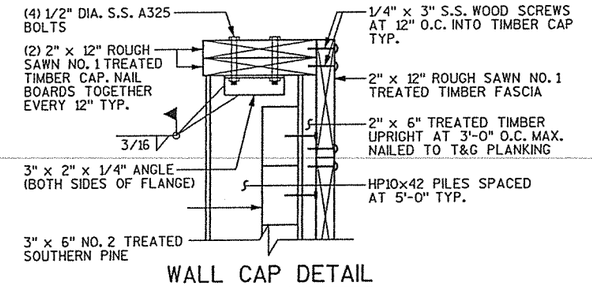

WALL CAP DETAIL

TYP. AT PILES SHOWN

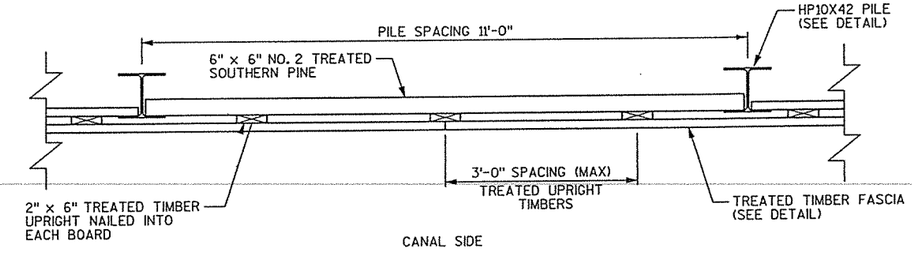

PROPOSED CANITLEVERED SOLDIER PILE REVETMENT WALL PLAN VIEW

STA 11'B'+90 - STA 12'B'+01

NOTES:

DRAWING SHALL NOT BE SCALED.

ALL TIMBER CONNECTORS AND HARDWARE SHALL BE INCLUDED IN THE COST FOR BID ITEM "SPV.0090.08"

UNLESS OTHERWISE NOTED, ALL STEEL IS BARE STEEL.

S.S. = STAINLESS STEEL

⚠ FASCIA AND CAP BOARD MUST REMAIN STRAIGHT.

NO.	DATE	REVISION	BY

STATE OF WISCONSIN
DEPARTMENT OF TRANSPORTATION
DIVISION OF HIGHWAYS

STRUCTURE R-11-27

CONST. SPEC.	2005	DRAWN BY	BXJ	PLANS CK'D.	GAR

PLAN & TYPICAL SECTION

SHEET 9 OF 11

FILE= x:\16194-00\02001\TECH\cadd\Final Plans 2005\080709_wd.dgn
SCALE =

8

8

PLOT SCALE : 8.0000 ' / IN.

I.D.

STATE PROJECT NUMBER	SHEET NO.
6966-05-07	8.

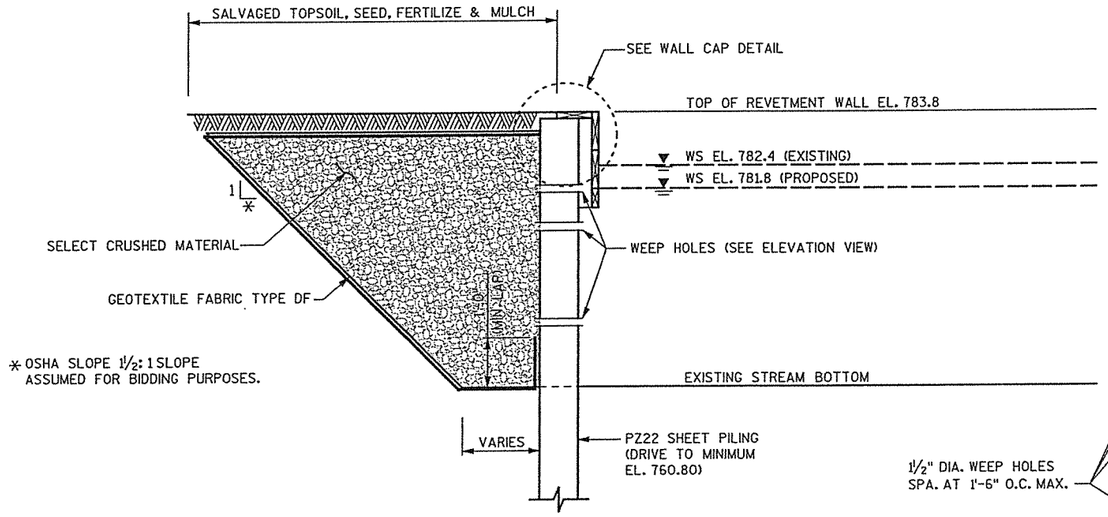

PROPOSED CANTILEVERD SHEET PILE REVETMENT WALL SECTION

STA 15'B'+25 - STA 16'B'+39
(LOOKING WEST)

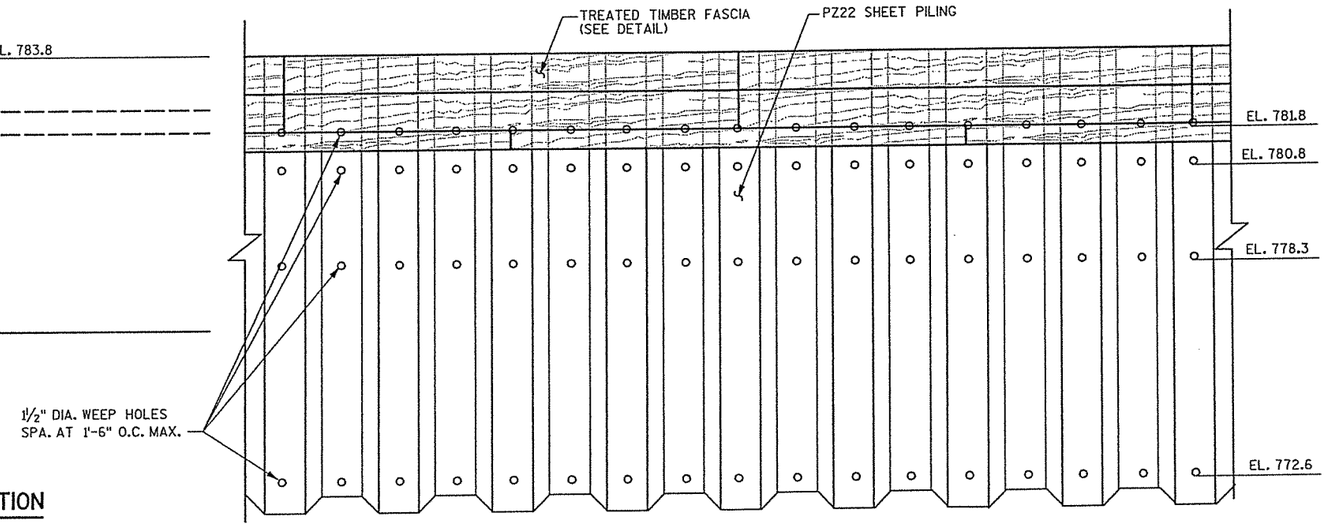

ELEVATION VIEW

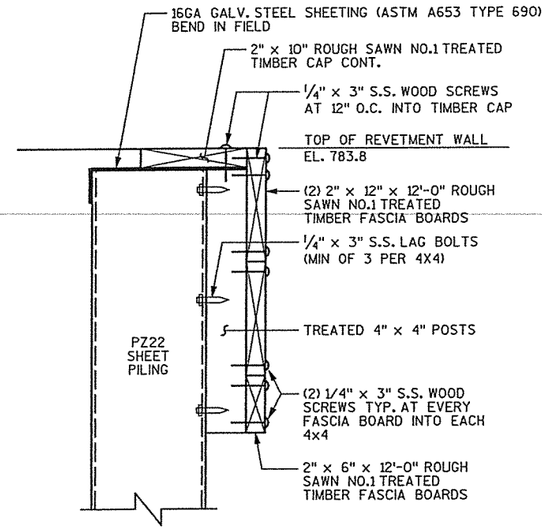

WALL DETAIL

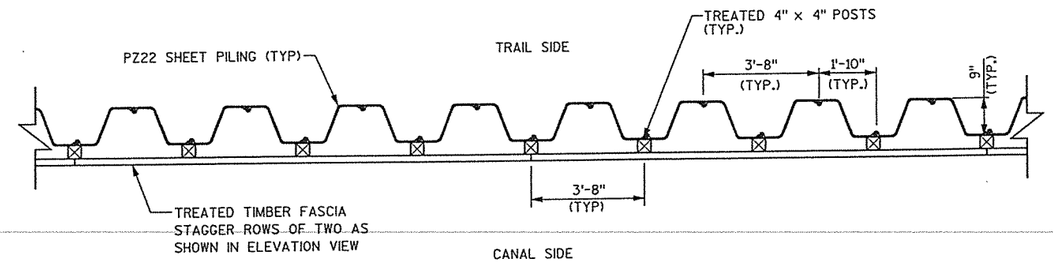

PROPOSED CANTILEVERED SHEET PILE REVETMENT WALL PLAN VIEW

STA 14'B'+85 - STA 16'B'+39

NOTES:

DRAWING SHALL NOT BE SCALED.

ALL TIMBER CONNECTORS AND HARDWARE
SHALL BE INCLUDED IN THE COST FOR BID ITEM "SPV.0090.08"

UNLESS OTHERWISE NOTED, ALL STEEL IS BARE STEEL.

S.S. = STAINLESS STEEL

FASCIA AND CAP BOARD MUST REMAIN STRAIGHT.

NO.	DATE	REVISION	BY

STATE OF WISCONSIN
DEPARTMENT OF TRANSPORTATION
DIVISION OF HIGHWAYS

STRUCTURE R-11-27

CONST. SPEC.	DRAWN BY	PLANS CK'D.
2005	BXJ	GAR

PLAN & TYPICAL SECTION

SHEET 10 OF 11

8

8

FILE = x:\16194-00\02001\TECH\cadd\Final Plans 2005\080710_wd.dgn
SCALE =

STATE PROJECT NUMBER	SHEET NO.
6966-05-07	8.

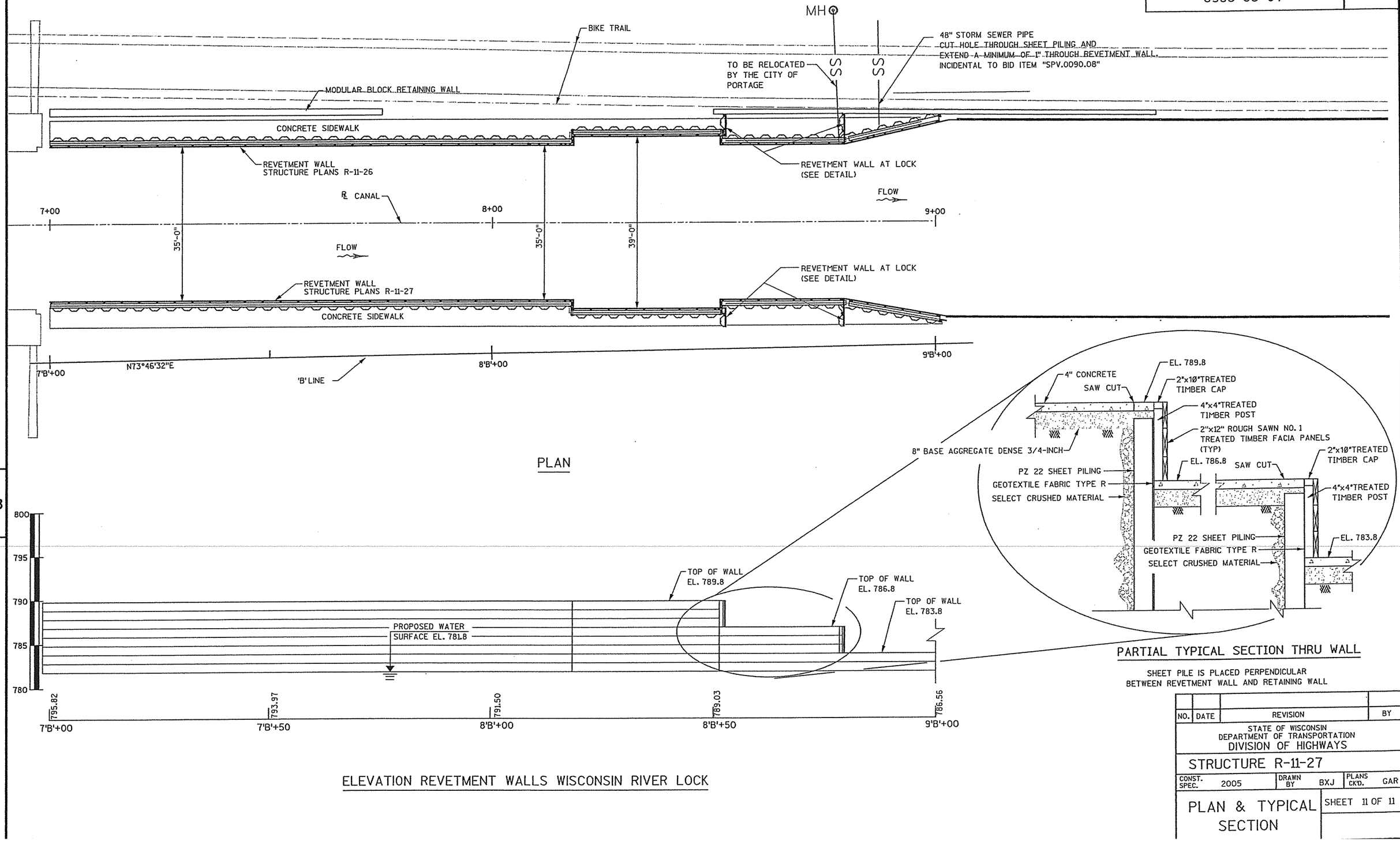

PLAN

ELEVATION REVETMENT WALLS WISCONSIN RIVER LOCK

PARTIAL TYPICAL SECTION THRU WALL

SHEET PILE IS PLACED PERPENDICULAR
BETWEEN REVETMENT WALL AND RETAINING WALL

NO.	DATE	REVISION	BY

STATE OF WISCONSIN
DEPARTMENT OF TRANSPORTATION
DIVISION OF HIGHWAYS

STRUCTURE R-11-27

CONST. SPEC.	2005	DRAWN BY	BXJ	PLANS CK'D.	GAR

PLAN & TYPICAL SECTION

SHEET 11 OF 11

8

8

FILE= X:\16194-00\02001\TECH\cadd\Final Plans 2005\080711_wd.dgn

DISTRICT CONTACT:

TYPE CODE = X

STATE PROJECT NUMBER	SHEET NO.
6996-05-07	8.

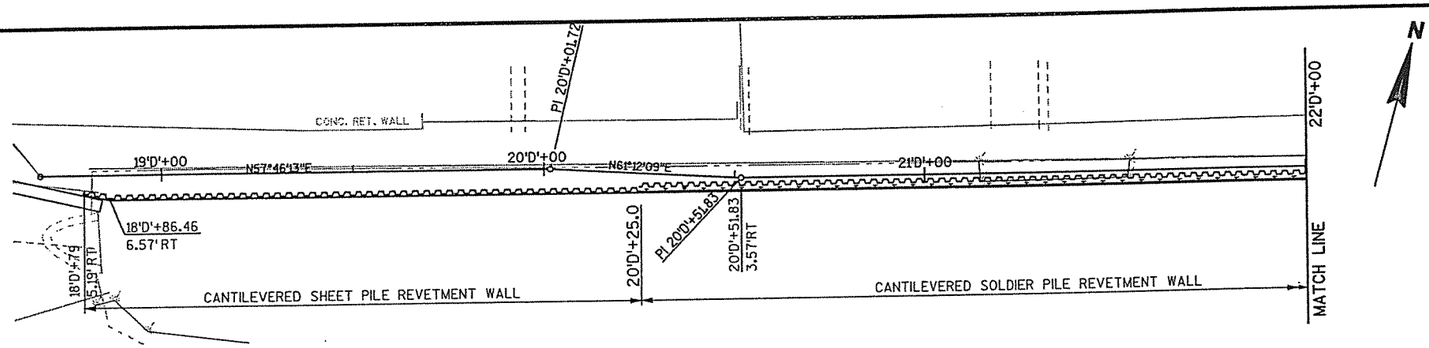

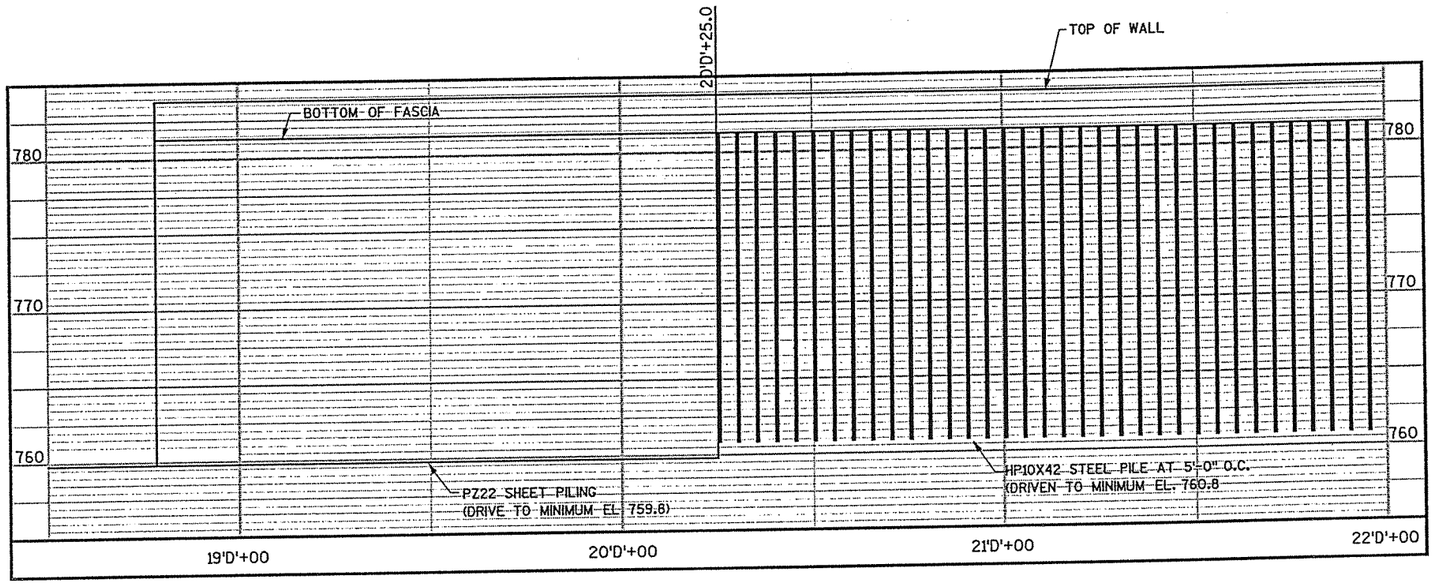

COMBINATION OF SHEET PILE AND CANTILEVERED SOLDIER PILE REVETMENT WALL

BID ITEMS	UNIT	TOTAL
TREATED LUMBER AND TIMBER	MBM	20
HP10x42 PILING STEEL DELIVERED & DRIVEN	LF	1540
STEEL SHEET PERMANENT PILING DELIVERED & DRIVEN	SF	7785
EXCAVATION FOR STRUCTURES REVETMENT WALL (R-11-28)	LS	1
STRUCTURAL STEEL CARBON (STEEL BRACKETS)	LB	1500

QUANTITIES ARE FOR INFORMATIONAL PURPOSES ONLY.
ALL PROJECT COSTS ARE PAID FOR UNDER BID ITEM " SPV.0090.09"

STEEL SHEET PILING REVETMENT WALL OPTION (SEE SPECIAL PROVISIONS)

BID ITEMS	UNIT	TOTAL
TREATED LUMBER AND TIMBER	MBM	13
PZ-22 STEEL SHEET PERMANENT PILING DELIVERED & DRIVEN	SF	11635
EXCAVATION FOR STRUCTURES REVETMENT WALL (R-11-28)	LS	1

QUANTITIES ARE FOR INFORMATIONAL PURPOSES ONLY.
ALL PROJECT COSTS ARE PAID FOR UNDER BID ITEM " SPV.0090.09"

DESIGN SOIL PARAMETERS

ELEVATION	SOIL DESCRIPTIONS	SOIL UNIT WEIGHT (pcf)	COHESION (psf)	ANGLE OF INTERNAL FRICTION (DEGREES)
ABOVE 778.8	FILL MATERIAL	130	0	37
BELOW 778.8	NATIVE SOIL	115	0	30

WISCONSIN
RUSSELL A. CHESMORE
E-26272
VERONA
WI
PROFESSIONAL ENGINEER

Russell A. Chesmore
10/28/05

BRIDGE OFFICE CONTACT
FINN HUBBARD
TELEPHONE: (608) 266-8489

CONSULTANT CONTACT
RUSTY CHESMORE , P.E.
TELEPHONE: (608) 273-6380

DESIGN DATA

ULTIMATE DESIGN STRESSES:

HP10x42	F'y = 36 ksi
PZ22 SHEET PILE	F'allow = 23.4 ksi
3" x 6" LUMBER	F'b = 1160 psi
	F'v = 78.5 psi

LIST OF DRAWINGS:

GENERAL PLAN	1
GENERAL PLAN	2
SUBSURFACE EXPLORATION	3
PLAN & TYPICAL SECTIONS	4
PLAN & TYPICAL SECTIONS	5

GENERAL NOTES:

CONSTRUCTION REQUIREMENTS SHALL CONFORM TO STATE OF WISCONSIN STANDARD SPECIFICATIONS.

DRAWINGS SHALL NOT BE SCALED.

SEE CANAL CROSS SECTION SHEETS FOR EXCAVATION LIMITS.

SEE BORING LOG ON SHEET 3 FOR SUBGRADE PROPERTIES.

ALL LUMBER SHALL BE PRESSURE TREATED WITH CHROMATED COPPER ARSENATE AS PER CURRENT STATE AND/OR AASHTO SPECIFICATIONS. ALL LUMBER IS ROUGH CUT UNLESS OTHERWISE NOTED. ALL CONNECTORS AND HARDWARE SHALL BE GALVANIZED OR STAINLESS STEEL AS SHOWN IN THE DETAILS.

ALL EXISTING ELEVATIONS AND DIMENSIONS TO BE FIELD VERIFIED.

ALL LUMBER CUT OR DRILLED IN FIELD SHALL BE TREATED WITH AN APPROVED PRESERVATIVE.

THIS REVETMENT WALL WAS DESIGNED TO RETAIN THE AMOUNT OF SOIL AS SHOWN ON THESE PLANS. THE DESIGNER SHOULD BE CONSULTED PRIOR TO ANY FUTURE DREDGING OF THE CANAL OR INCREASE IN SURCHARGE OF THE RETAINED SOIL.

F.F. - FRONT FACE
B.F. - BACK FACE.

NO.	DATE	REVISION	BY

MEAD & HUNT — ENGINEERS ARCHITECTS SCIENTISTS PLANNERS

STATE OF WISCONSIN
DEPARTMENT OF TRANSPORTATION
DIVISION OF HIGHWAYS

STRUCTURE R-11-28

REVETMENT WALL ALONG PORTAGE CANAL

COUNTY COLUMBIA		~~TOWN/CITY/VILLAGE~~ PORTAGE	
DESIGN SPEC. AASHTO 2005	LOAD N/A		CONST. SPEC. 2005
DESIGNED BY JAA	DESIGN CK'D. JFR	DRAWN BY DMS	PLANS CK'D. RAC

APPROVED _____ DATE _____
CHIEF STRUCTURAL DESIGN ENGINEER

GENERAL PLAN

SHEET 1 OF 5

DATE:

FILE = SCALE =

8

8

DISTRICT CONTACT:

TYPE CODE = X

STATE PROJECT NUMBER	SHEET NO.
6996-05-07	8.

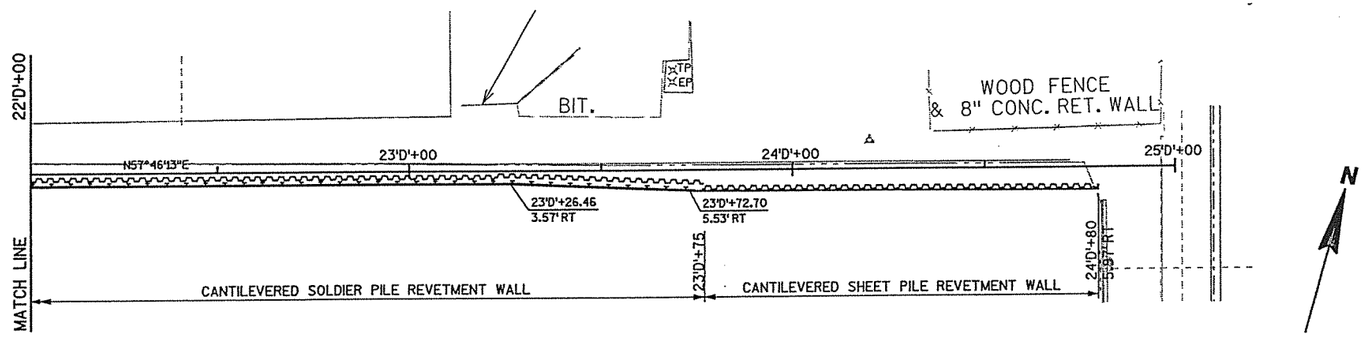

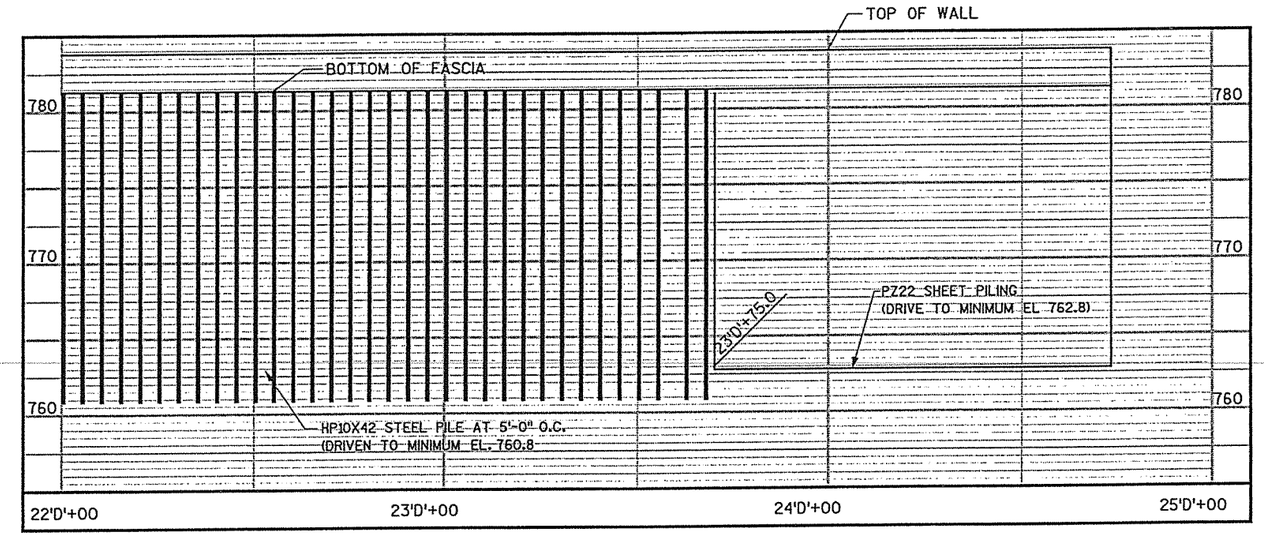

DESIGN SOIL PARAMETERS

ELEVATION	SOIL DESCRIPTIONS	SOIL UNIT WEIGHT (pcf)	COHESION (psf)	ANGLE OF INTERNAL FRICTION (DEGREES)
ABOVE 778.8	FILL MATERIAL	130	0	37
BELOW 778.8	NATIVE SOIL	115	0	30

BRIDGE OFFICE CONTACT
FINN HUBBARD
TELEPHONE: (608) 266-8489

CONSULTANT CONTACT
GARY RUCHTI , P.E.
TELEPHONE: (608) 273-6380

NO.	DATE	REVISION	BY

MEAD & HUNT — ENGINEERS ARCHITECTS SCIENTISTS PLANNERS

STATE OF WISCONSIN
DEPARTMENT OF TRANSPORTATION
DIVISION OF HIGHWAYS

STRUCTURE R-11-28

REVETMENT WALL ALONG PORTAGE CANAL

COUNTY	~~TOWN~~/CITY/VILLAGE	
COLUMBIA	PORTAGE	
DESIGN SPEC. AASHTO 2005	LOAD N/A	CONST. SPEC. 2005
DESIGNED BY JAA / DESIGN CK'D. JFR	DRAWN BY DMS	PLANS CK'D. RAC

APPROVED _____ DATE _____
CHIEF STRUCTURAL DESIGN ENGINEER

GENERAL PLAN

SHEET 2 OF 5

DATE:

FILE = SCALE =

PLOT SCALE : 40.000000 ' / IN.

I.D.

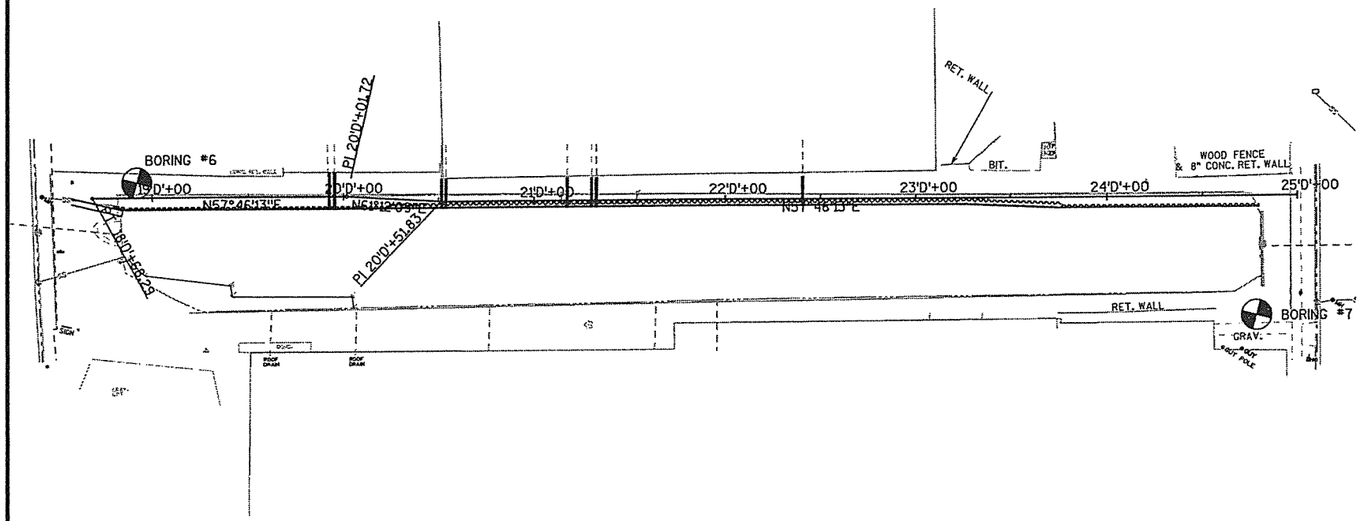

N

BORINGS BY:
SOILS & ENGINEERING SERVICES, INC.
MADISON, WI
JULY 8, 2004

STATE PROJECT NUMBER	SHEET NO.
6996-05-07	8.

ABBREVIATIONS

F— FINE M— MEDIUM C— COARSE
WS— WEATHERED SO— SOUND

MATERIAL SYMBOLS

TOPSOIL, SILT, SANDSTONE
SAND, PEAT, LIMESTONE
GRAVEL, CLAY, IGNEOUS ROCK

LEGEND OF PROBING

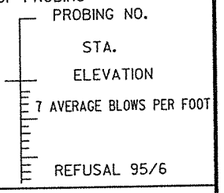

95/6=95 BLOWS FOR 6" PENETRATION
PROBING TAKEN WITH A 350#WT.
FALLING 18" ON A 2" O.D. POINT.

LEGEND OF BORING

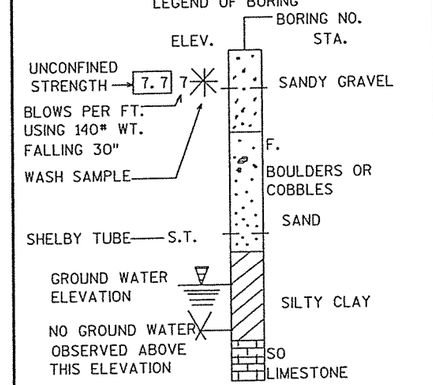

UNLESS OTHERWISE SPECIFIED, THE BLOWS PER FOOT AT THE LOCATIONS INDICATED ARE BASED ON DRIVING A O.D.XL 4" I.D. SPLIT SPOON SAMPLER WITH A 140# HAMMER HAVING A FREE FALL OF 30". THE BLOW COUNT IS TAKEN IN UNDISTURBED SOIL IMMEDIATELY BELOW A CASED OR OPEN HOLE ELIMINATING SIDE FRICTION ON THE DRIVE PIPE.

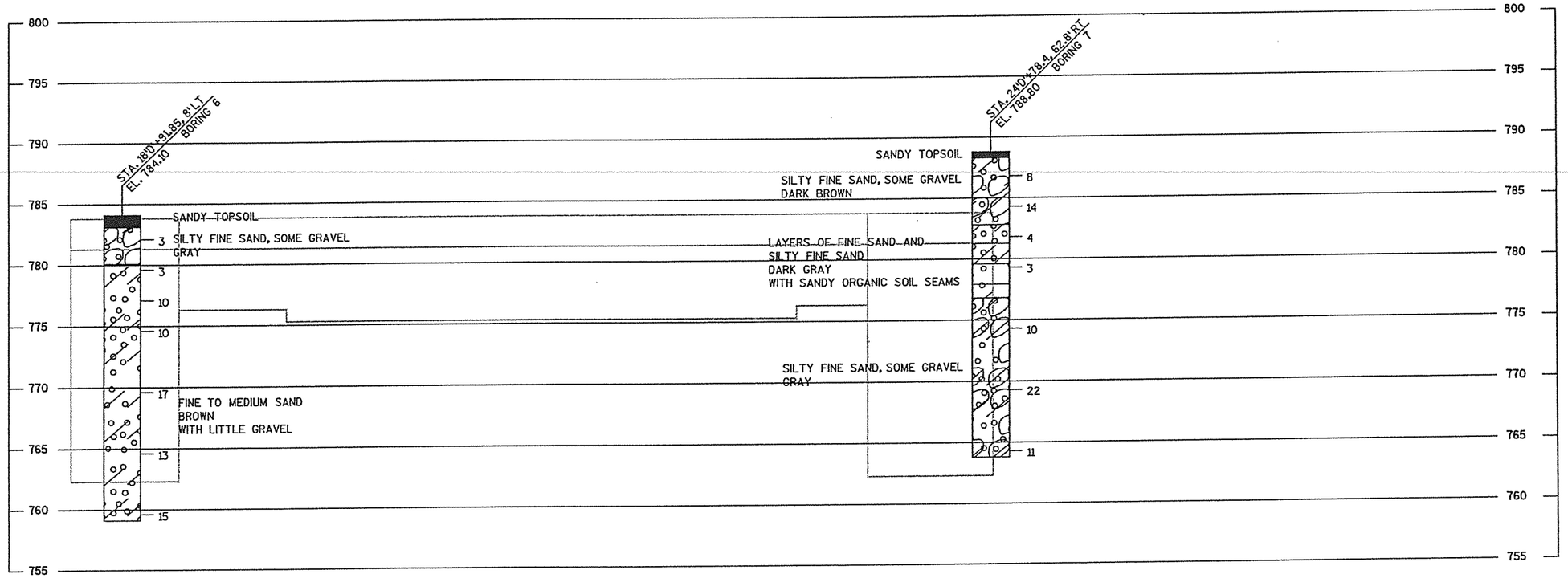

SUBSURFACE EXPLORATION FOR FOUNDATION DESIGN AND BIDDERS INFORMATION

TO OBTAIN RELATIVE DATA CONCERNING THE CHARACTER OF MATERIAL IN AND UPON WHICH THE FOUNDATION MIGHT BE BUILT, BORINGS AND/OR SOUNDINGS WERE MADE AT POINTS APPROXIMATELY AS INDICATED ON THIS DRAWING. THE DATA PRESENTED HEREIN REPRESENTS THE FINDINGS OF THE SUBSURFACE EXPLORATIONS MADE. HOWEVER, BECAUSE THE DEPTHS INVESTIGATED ARE LIMITED AND THE AREA OF THE BORINGS AND/OR SOUNDINGS IS VERY SMALL IN RELATION TO THE ENTIRE AREA, THE DIVISION OF HIGHWAYS DOES NOT WARRANT CONDITIONS BELOW THE DEPTHS INVESTIGATED OR THAT THE CLASSIFICATION OF MATERIAL ENCOUNTERED IN THESE INVESTIGATIONS IS NECESSARILY TYPICAL OF THE ENTIRE SITE.

NO.	DATE	REVISION	BY

STATE OF WISCONSIN
DEPARTMENT OF TRANSPORTATION
DIVISION OF HIGHWAYS

STRUCTURE R-11-28

CONST. SPEC.	2005	DRAWN BY	MG	PLANS CK'D.	RAC

SUBSURFACE EXPLORATION

SHEET 3 OF 5

8

8

FILE=
SCALE =

STATE PROJECT NUMBER	SHEET NO.
6966-05-07	8.

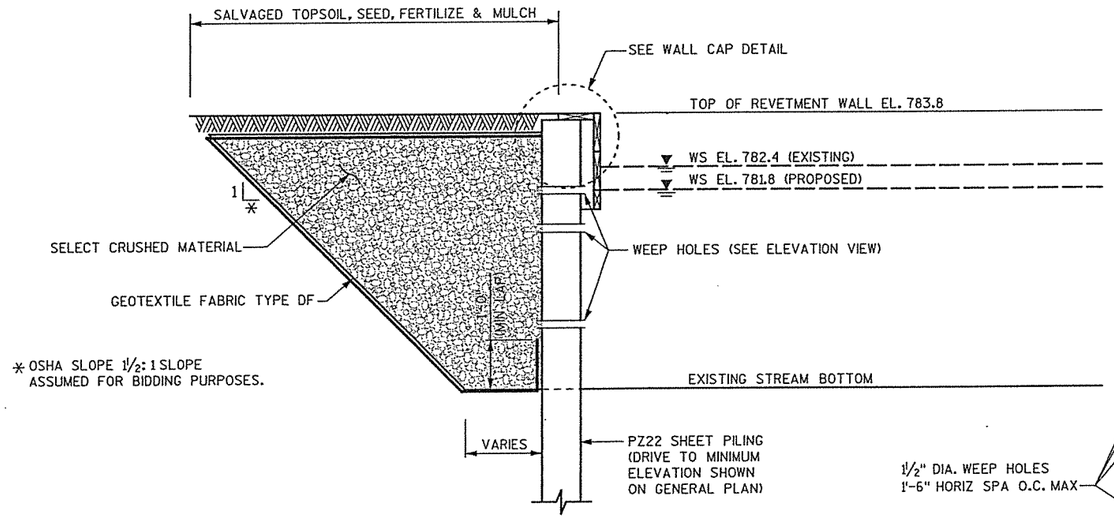

PROPOSED CANTILEVERD SHEET PILE REVETMENT WALL SECTION

STA 18'D'+79 - STA 20'D'+25 : STA 23'D'+75 - STA 24'D'+80
(LOOKING EAST)

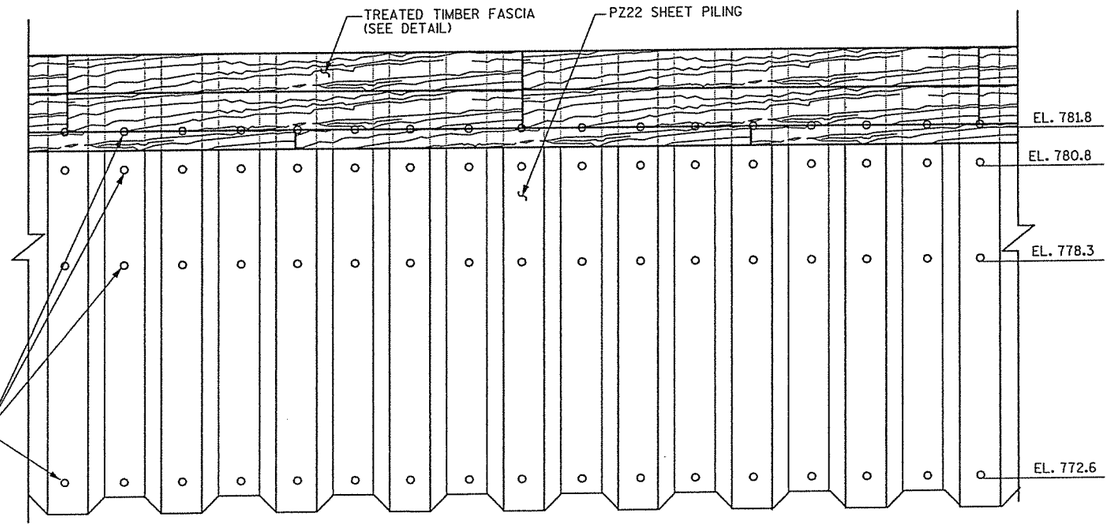

ELEVATION VIEW

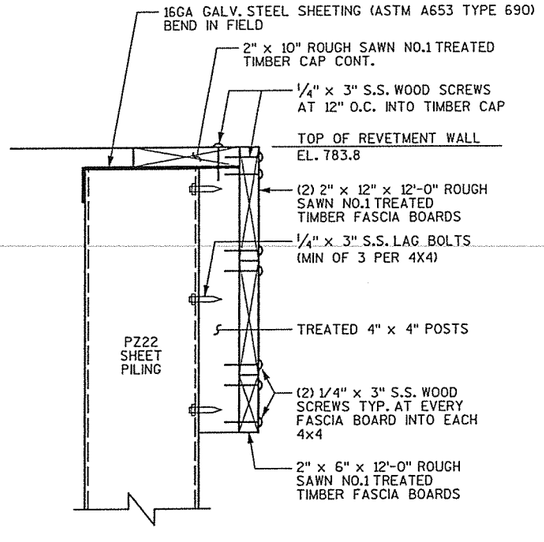

WALL DETAIL

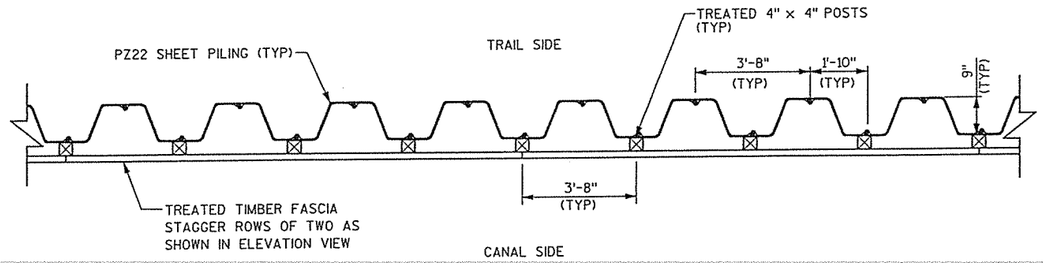

PROPOSED CANTILEVERED SHEET PILE REVETMENT WALL PLAN VIEW

STA 18'D'+79 - STA 20'D'+25 : STA 23'D'+75 - STA 24'D'+80

NOTES:

DRAWING SHALL NOT BE SCALED.

ALL TIMBER CONNECTORS AND HARDWARE SHALL BE INCLUDED IN THE COST FOR BID ITEM "SPV.0090.09".

UNLESS OTHERWISE NOTED, ALL STEEL IS BARE STEEL.

S.S. = STAINLESS STEEL

ANY EXCAVATION BELOW EXISTING STREAM BOTTOM BETWEEN WISCONSIN ST. AND ADAMS ST. SHALL BE USED AS BACKFILL MATERIAL BEHIND THE REVETMENT WALLS.

FASCIA AND CAP BOARD MUST REMAIN STRAIGHT.

NO.	DATE	REVISION	BY

STATE OF WISCONSIN
DEPARTMENT OF TRANSPORTATION
DIVISION OF HIGHWAYS

STRUCTURE R-11-28

CONST. SPEC. 2005	DRAWN BY DMS	PLANS CK'D. RAC

PLAN & TYPICAL SECTION | SHEET 4 OF 5

8

8

FILE= X:\16194-00\02001\TECH\eddd\Final Plans 2005\080804_wd.dgn
SCALE =

PLOT SCALE = 4.0000 ' / IN. LD

STATE PROJECT NUMBER	SHEET NO.
6966-05-07	8.

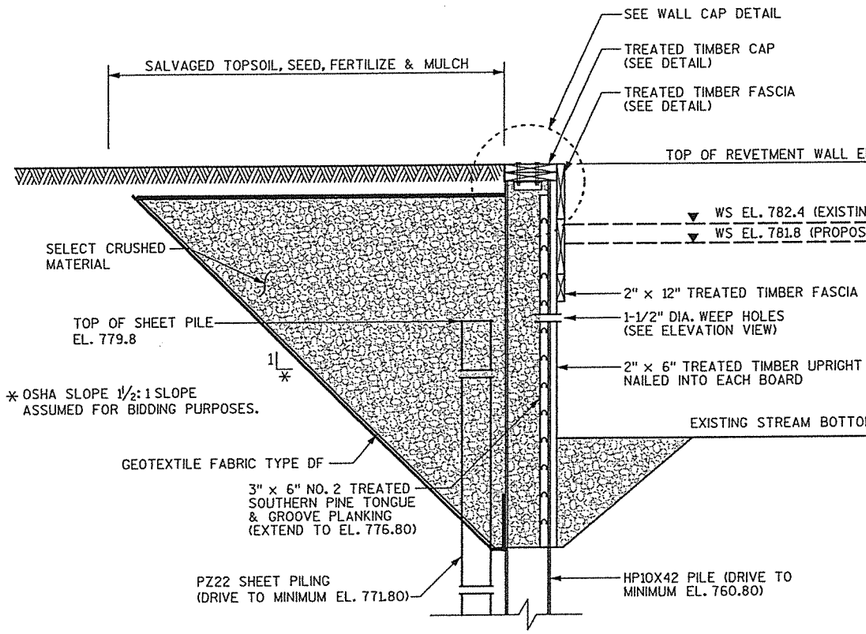

PROPOSED CANTILEVERED SOLDIER PILE REVETMENT WALL SECTION

STA. 20'D'+25.00 - STA. 23'D'+75.00

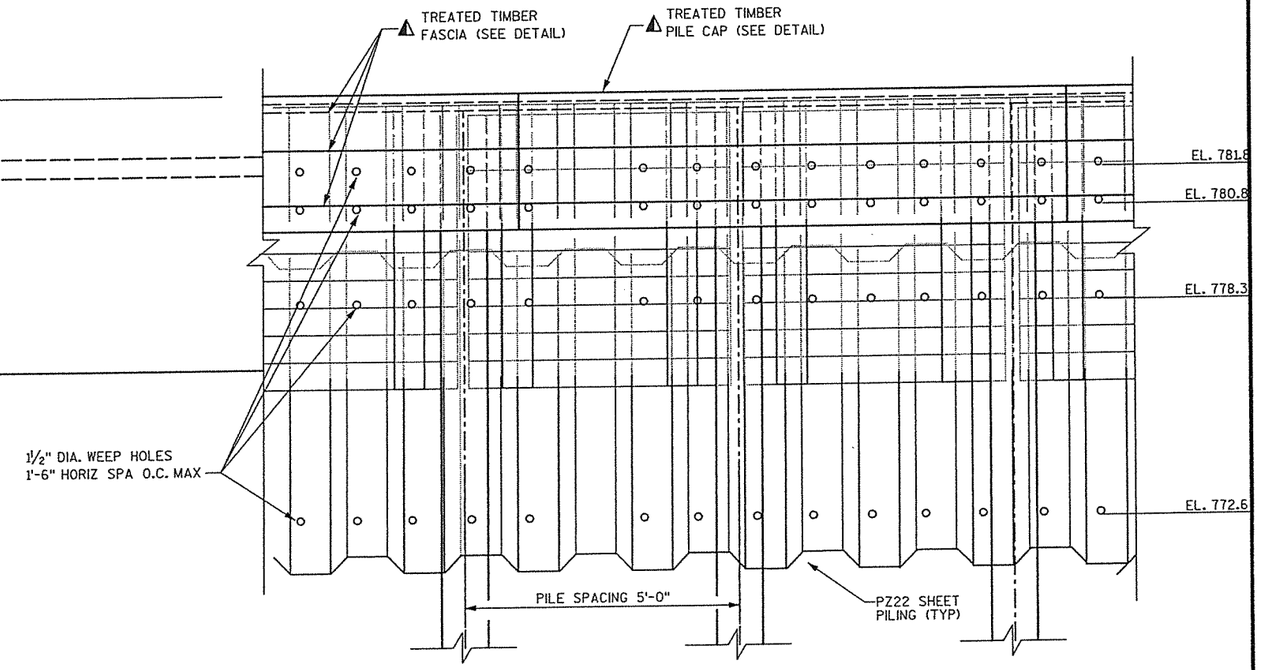

ELEVATION VIEW

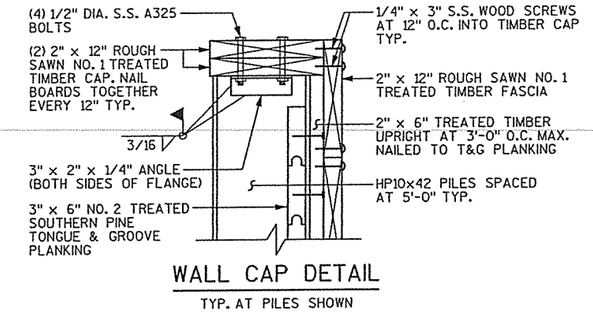

WALL CAP DETAIL

TYP. AT PILES SHOWN

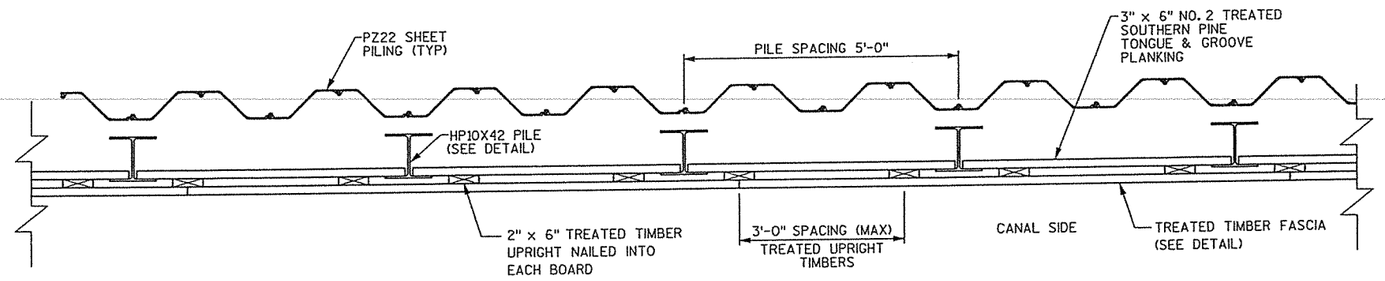

PROPOSED CANTILEVERED SOLDIER PILE REVETMENT WALL PLAN VIEW

STA. 20'D'+25.00 - STA. 23'D'+75.00

NOTES:

DRAWING SHALL NOT BE SCALED.

ALL TIMBER CONNECTORS AND HARDWARE SHALL BE INCLUDED IN THE COST FOR BID ITEM "SPV.0090.09".

UNLESS OTHERWISE NOTED, ALL STEEL IS BARE STEEL.

S.S. = STAINLESS STEEL

ANY EXCAVATION BELOW EXISTING STREAM BOTTOM BETWEEN WISCONSIN ST. AND ADAMS ST. SHALL BE USED AS BACKFILL MATERIAL BEHIND THE REVETMENT WALLS.

NO.	DATE	REVISION	BY

STATE OF WISCONSIN
DEPARTMENT OF TRANSPORTATION
DIVISION OF HIGHWAYS

STRUCTURE R-11-28

CONST. SPEC.	2005	DRAWN BY	DMS	PLANS CK'D.	RAC

PLAN & TYPICAL SECTION

SHEET 5 OF 5

8

8

FILE= x:\16194-00\02001\TECH\caddd\Final Plans 2005\080805_wd.dgn
SCALE =

DISTRICT CONTACT:

TYPE CODE = X

STATE PROJECT NUMBER	SHEET NO.
6996-05-07	8.

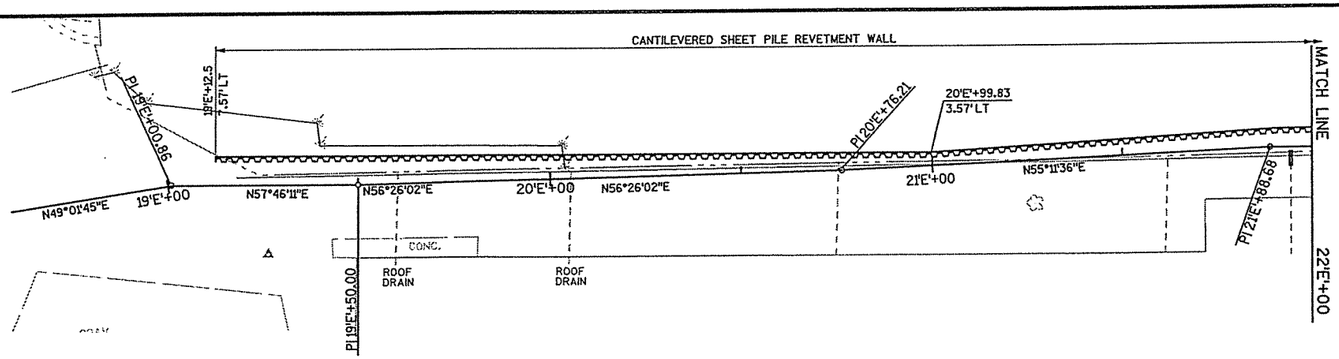

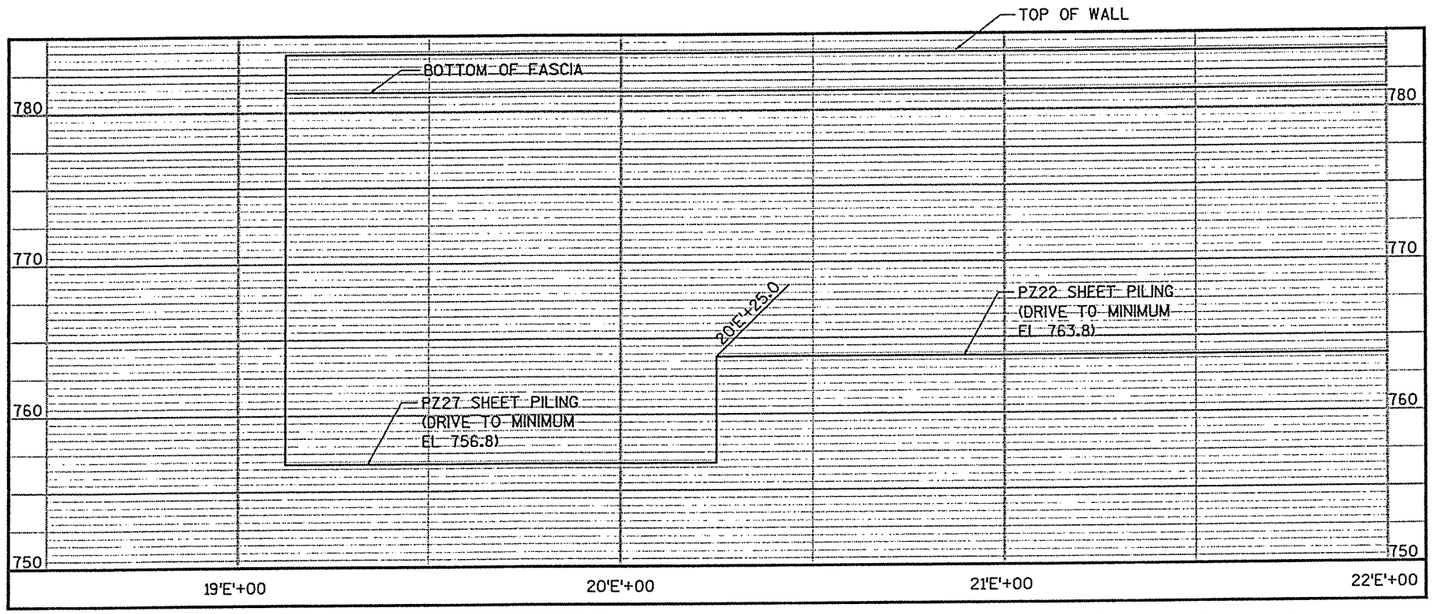

TOTAL ESTIMATED QUANTITIES

BID ITEMS	UNIT	TOTAL
TREATED LUMBER AND TIMBER	MBM	13
PZ-22 STEEL SHEET PERMANANT PILING DELIVERED & DRIVEN	SF	10360
PZ-27 STEEL SHEET PERMANANT PILING DELIVERED & DRIVEN	SF	3040
STRUCTURAL STEEL CARBON (STEEL BRACKETS)	LB	1500
EXCAVATION FOR STRUCTURES REVETMENT WALL (R-11-29)	LS	1

QUANTITIES ARE FOR INFORMATIONAL PURPOSES ONLY.
ALL PROJECT COSTS ARE PAID FOR UNDER BID ITEM "SPV.0090.10"

DESIGN SOIL PARAMETERS

ELEVATION	SOIL DESCRIPTIONS	SOIL UNIT WEIGHT (pcf)	COHESION (psf)	ANGLE OF INTERNAL FRICTION (DEGREES)
ABOVE 778.8	FILL MATERIAL	130	0	37
BELOW 778.8	NATIVE SOIL	115	0	30

DESIGN DATA

ULTIMATE DESIGN STRESSES:

SHEET PILE ——— F'allow = 23.4 ksi

LIST OF DRAWINGS:

GENERAL PLAN ——— 1
GENERAL PLAN ——— 2
SUBSURFACE EXPLORATION ——— 3
PLAN & TYPICAL SECTIONS ——— 4

GENERAL NOTES:

CONSTRUCTION REQUIREMENTS SHALL CONFORM TO STATE OF WISCONSIN STANDARD SPECIFICATIONS.

DRAWINGS SHALL NOT BE SCALED.

SEE CANAL CROSS SECTION SHEETS FOR EXCAVATION LIMITS.

SEE BORING LOG ON SHEET 3 FOR SUBGRADE PROPERTIES.

ALL LUMBER SHALL BE PRESSURE TREATED WITH CHROMATED COPPER ARSENATE AS PER CURRENT STATE AND/OR AASHTO SPECIFICATIONS. ALL LUMBER IS ROUGH CUT UNLESS OTHERWISE NOTED.

ALL CONNECTORS AND HARDWARE SHALL BE GALVANIZED OR STAINLESS STEEL AS SHOWN IN THE DETAILS.

ALL EXISTING ELEVATIONS AND DIMENSIONS TO BE FIELD VERIFIED.

ALL LUMBER CUT OR DRILLED IN FIELD SHALL BE TREATED WITH AN APPROVED PRESERVATIVE.

THIS REVETMENT WALL WAS DESIGNED TO RETAIN THE AMOUNT OF SOIL AS SHOWN ON THESE PLANS. THE DESIGNER SHOULD BE CONSULTED PRIOR TO ANY FUTURE DREDGING OF THE CANAL OR INCREASE IN SURCHARGE OF THE RETAINED SOIL.

F.F. - FRONT FACE
B.F. - BACK FACE.

WISCONSIN
RUSSELL A. CHESMORE
E-26272
VERONA
WI
PROFESSIONAL ENGINEER

Russell A. Chesmore
10/28/05

BRIDGE OFFICE CONTACT
FINN HUBBARD
TELEPHONE: (608) 266-8489

CONSULTANT CONTACT
RUSTY CHESMORE , P.E.
TELEPHONE: (608) 273-6380

NO.	DATE	REVISION	BY

MEAD & HUNT
ENGINEERS
ARCHITECTS
SCIENTISTS
PLANNERS

STATE OF WISCONSIN
DEPARTMENT OF TRANSPORTATION
DIVISION OF HIGHWAYS

STRUCTURE R-11-29

REVETMENT WALL ALONG PORTAGE CANAL

COUNTY COLUMBIA		~~TOWN/CITY/VILLAGE~~ PORTAGE	
DESIGN SPEC. AASHTO 2005		LOAD N/A	CONST. SPEC. 2005
DESIGNED BY JAA	DESIGN CK'D. JFR	DRAWN BY DMS	PLANS CK'D. RAC

APPROVED _____ DATE _____
CHIEF STRUCTURAL DESIGN ENGINEER

GENERAL PLAN

SHEET 1 OF 4

DATE:

8

8

FILE=
SCALE =

PLOT SCALE : 40.000000 ' / IN. I.D.

DISTRICT CONTACT:

TYPE CODE = X

STATE PROJECT NUMBER	SHEET NO.
6996-05-07	8.

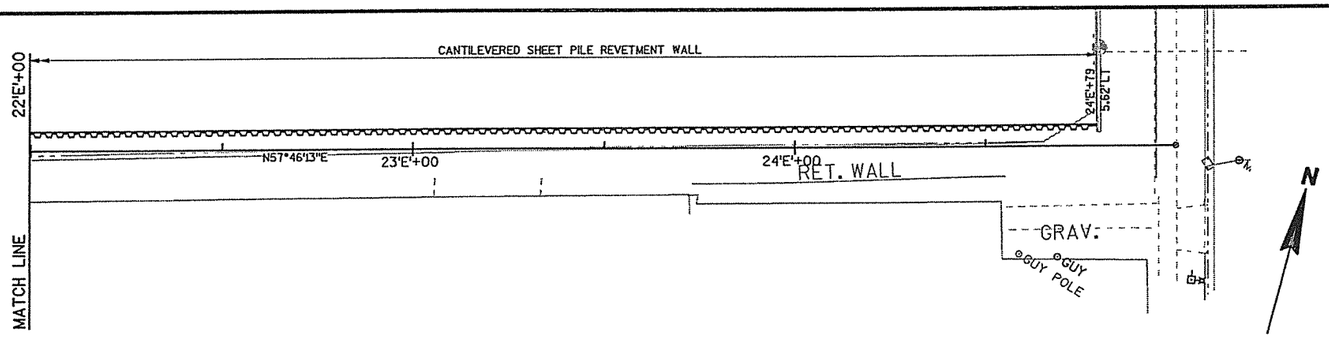

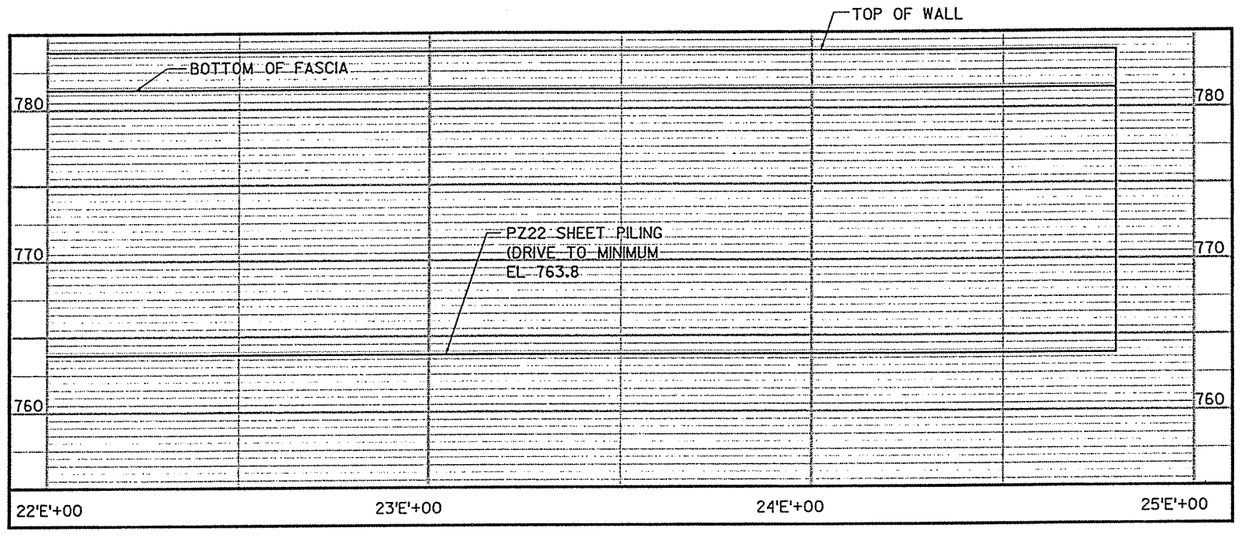

8

8

DESIGN SOIL PARAMETERS

ELEVATION	SOIL DESCRIPTIONS	SOIL UNIT WEIGHT (pcf)	COHESION (psf)	ANGLE OF INTERNAL FRICTION (DEGREES)
ABOVE 778.8	FILL MATERIAL	130	0	37
BELOW 778.8	NATIVE SOIL	115	0	30

BRIDGE OFFICE CONTACT
FINN HUBBARD
TELEPHONE: (608) 266-8489

CONSULTANT CONTACT
GARY RUCHTI, P.E.

NO.	DATE	REVISION	BY

MEAD & HUNT — ENGINEERS ARCHITECTS SCIENTISTS PLANNERS

STATE OF WISCONSIN
DEPARTMENT OF TRANSPORTATION
DIVISION OF HIGHWAYS

STRUCTURE R-11-29

REVETMENT WALL ALONG PORTAGE CANAL

COUNTY	~~TOWN~~/CITY/~~VILLAGE~~		
COLUMBIA	PORTAGE		
DESIGN SPEC. AASHTO 2005	LOAD N/A	CONST. SPEC. 2005	
DESIGNED BY JAA	DESIGN CK'D. JFR	DRAWN BY DMS	PLANS CK'D. RAC

APPROVED _____ DATE _____
CHIEF STRUCTURAL DESIGN ENGINEER

GENERAL PLAN

SHEET 2 OF 4

DATE:

SCALE =

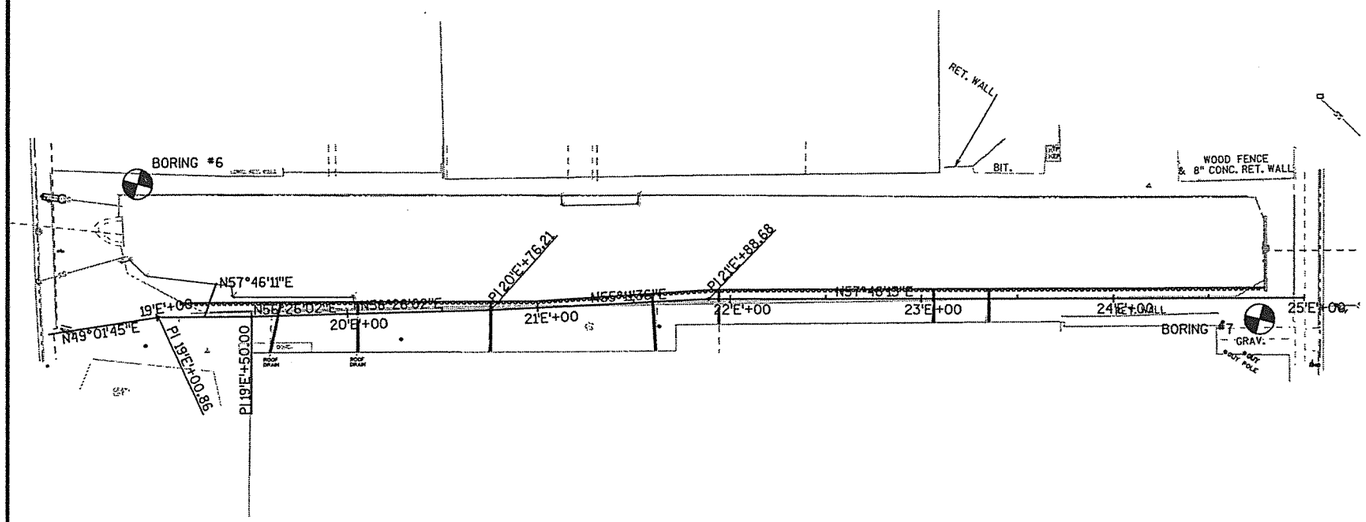

N

BORINGS BY:
SOILS & ENGINEERING SERVICES, INC.
MADISON, WI
JULY 8, 2004

STATE PROJECT NUMBER	SHEET NO.
6996-05-07	8.

ABBREVIATIONS

F— FINE M— MEDIUM C— COARSE
WS— WEATHERED SO— SOUND

MATERIAL SYMBOLS

TOPSOIL, SILT, SANDSTONE
SAND, PEAT, LIMESTONE
GRAVEL, CLAY, IGNEOUS ROCK

LEGEND OF PROBING

PROBING NO.
STA.
ELEVATION
95/6=95 BLOWS FOR 6" PENETRATION
PROBING TAKEN WITH A 350#WT. FALLING 18" ON A 2" O.D. POINT.
7 AVERAGE BLOWS PER FOOT
REFUSAL 95/6

LEGEND OF BORING

BORING NO.
ELEV.
STA.
UNCONFINED STRENGTH → 7.7
BLOWS PER FT. USING 140# WT. FALLING 30"
WASH SAMPLE
SANDY GRAVEL
F.
BOULDERS OR COBBLES
SAND
SHELBY TUBE— S.T.
GROUND WATER ELEVATION
SILTY CLAY
NO GROUND WATER OBSERVED ABOVE THIS ELEVATION
SO
LIMESTONE

UNLESS OTHERWISE SPECIFIED, THE BLOWS PER FOOT AT THE LOCATIONS INDICATED ARE BASED ON DRIVING A O.D.XL 4" I.D. SPLIT SPOON SAMPLER WITH A 140# HAMMER HAVING A FREE FALL OF 30". THE BLOW COUNT IS TAKEN IN UNDISTURBED SOIL IMMEDIATELY BELOW A CASED OR OPEN HOLE ELIMINATING SIDE FRICTION ON THE DRIVE PIPE.

SUBSURFACE EXPLORATION FOR FOUNDATION DESIGN AND BIDDERS INFORMATION

TO OBTAIN RELATIVE DATA CONCERNING THE CHARACTER OF MATERIAL IN AND UPON WHICH THE FOUNDATION MIGHT BE BUILT, BORINGS AND/OR SOUNDINGS WERE MADE AT POINTS APPROXIMATELY AS INDICATED ON THIS DRAWING. THE DATA PRESENTED HEREIN REPRESENTS THE FINDINGS OF THE SUBSURFACE EXPLORATIONS MADE. HOWEVER, BECAUSE THE DEPTHS INVESTIGATED ARE LIMITED AND THE AREA OF THE BORINGS AND/OR SOUNDINGS IS VERY SMALL IN RELATION TO THE ENTIRE AREA, THE DIVISION OF HIGHWAYS DOES NOT WARRANT CONDITIONS BELOW THE DEPTHS INVESTIGATED OR THAT THE CLASSIFICATION OF MATERIAL ENCOUNTERED IN THESE INVESTIGATIONS IS NECESSARILY TYPICAL OF THE ENTIRE SITE.

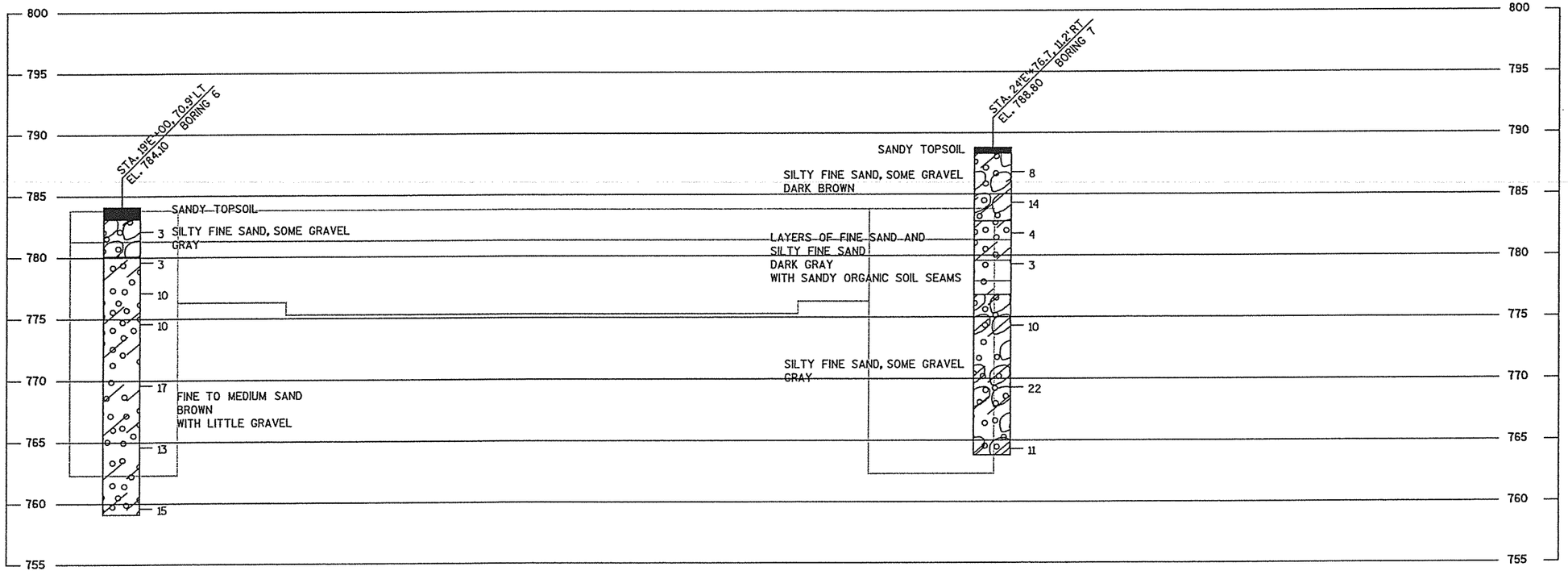

NO.	DATE	REVISION	BY

STATE OF WISCONSIN
DEPARTMENT OF TRANSPORTATION
DIVISION OF HIGHWAYS

STRUCTURE R-11-29

CONST. SPEC.	2005	DRAWN BY	MG	PLANS CK'D.	RAC

SUBSURFACE EXPLORATION

SHEET 3 OF 4

FILE =
SCALE =

8

8

STATE PROJECT NUMBER	SHEET NO.
6966-05-07	8.

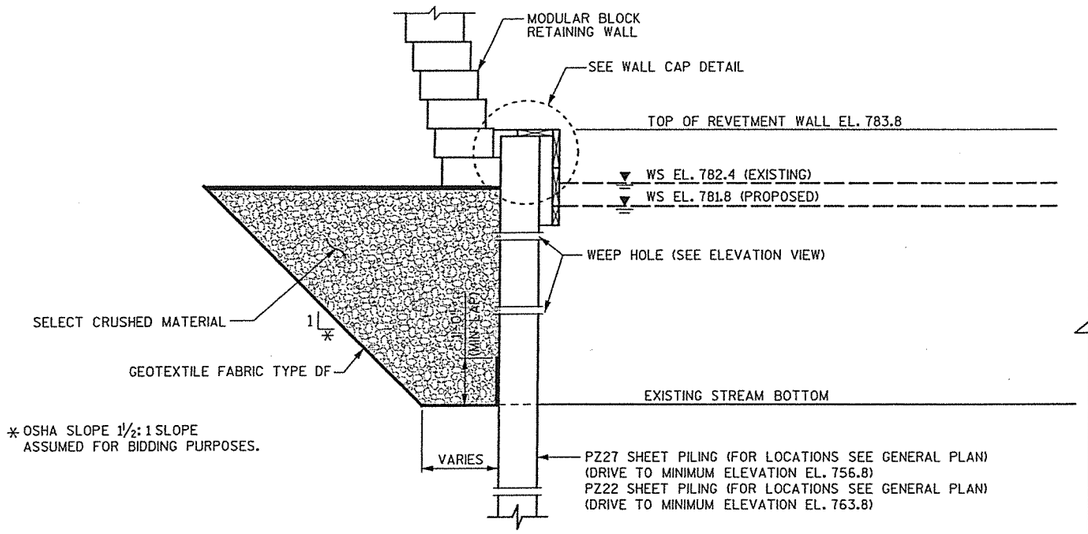

* OSHA SLOPE 1½:1 SLOPE
ASSUMED FOR BIDDING PURPOSES.

PROPOSED CANTILEVERD SHEET PILE REVETMENT WALL SECTION

STA 19'E'+12.5 - STA 24'E'+79
(LOOKING WEST)

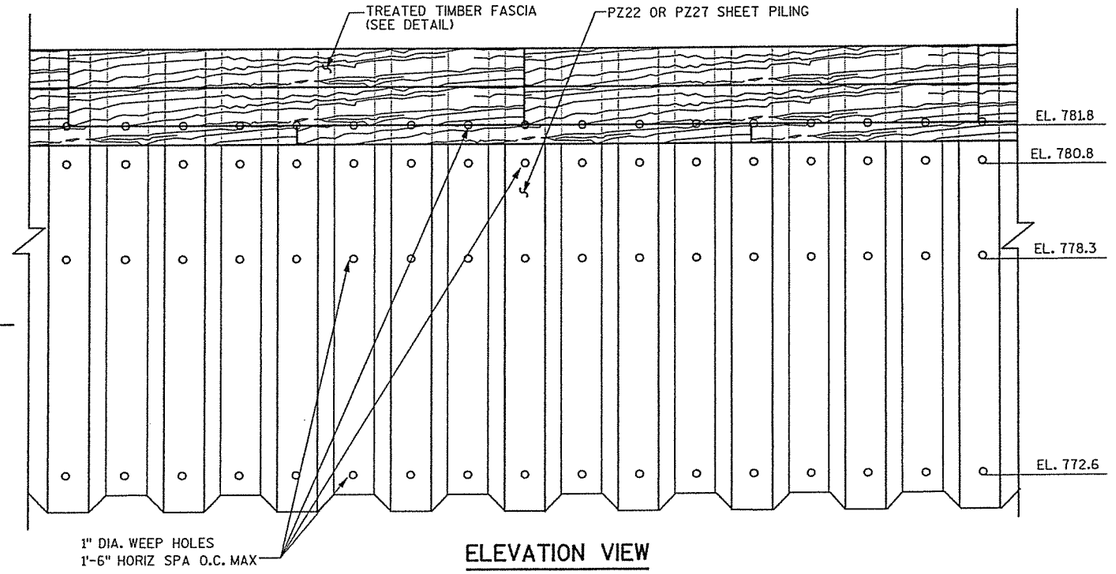

ELEVATION VIEW

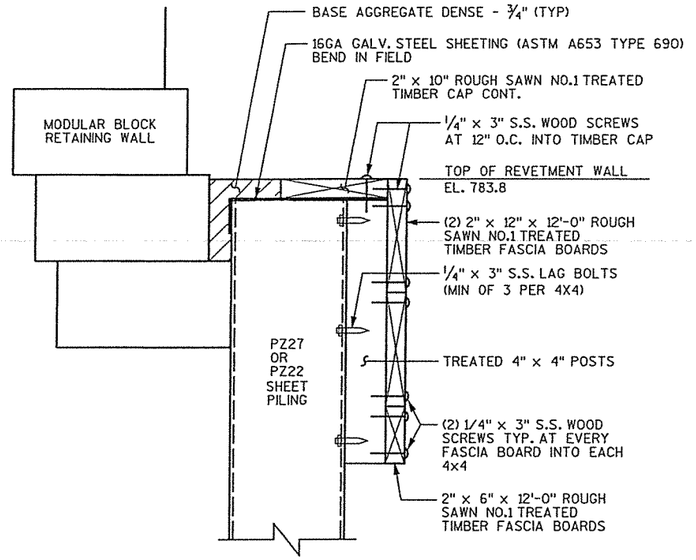

WALL DETAIL

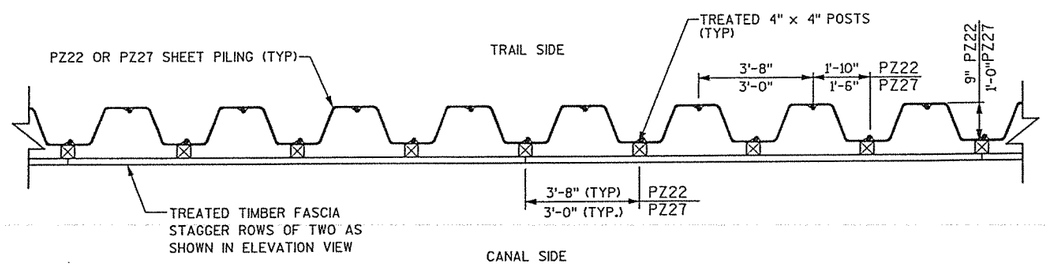

PROPOSED CANTILEVERED SHEET PILE REVETMENT WALL PLAN VIEW

STA 19'E'+12.5 - STA 24'E'+79

NOTES:

DRAWING SHALL NOT BE SCALED.

ALL TIMBER CONNECTORS AND HARDWARE SHALL BE INCLUDED IN THE COST FOR BID ITEM "SPV.0090.10".

UNLESS OTHERWISE NOTED, ALL STEEL IS BARE STEEL.

S.S. = STAINLESS STEEL

ANY EXCAVATION BELOW EXISTING STREAM BOTTOM BETWEEN WISCONSIN ST. AND ADAMS ST. SHALL BE USED AS BACKFILL MATERIAL BEHIND THE REVETMENT WALLS.

FASCIA AND CAP BOARD MUST REMAIN STRAIGHT.

NO.	DATE	REVISION	BY

STATE OF WISCONSIN
DEPARTMENT OF TRANSPORTATION
DIVISION OF HIGHWAYS

STRUCTURE R-11-29

CONST. SPEC.	2005	DRAWN BY	DMS	PLANS CK'D.	RAC

PLAN & TYPICAL SECTION

SHEET 4 OF 4

8

8

E= x:\16194-00\02001\TECH\cadd\Final Plans 2005\080904_wd.dgn
ALE =

EARTHWORK TABLE

STATION	TO STATION	END AREA CUT	END AREA FILL	INCREMENTAL VOL CUT	INCREMENTAL VOL EXP FILL	CUMULATIVE VOL CUT	CUMULATIVE VOL FILL	MASS HAUL
5+15	5+50	95.38	0	123.26	0	123.26	0.00	123.26
5+50	6+00	63.1	0	88.64	0	211.91	0.00	211.91
6+00	6+50	16.68	0	27.24	0	239.15	0.00	239.15
6+50	7+00	7.84	0	456.97	48.12	696.12	48.12	648.00
7+00	7+50	403.43	51.97	398.94	176.66	1095.06	224.78	870.28
7+50	8+00	88.58	138.82	130.74	229.28	1225.81	454.06	771.75
8+00	8+50	75.05	108.8	164.27	214.54	1390.07	668.59	721.48
8+50	9+00	72.79	122.9	161.10	125.73	1551.17	794.32	756.85
9+00	9+50	72.2	12.89	171.46	16.09	1722.63	810.42	912.21
9+50	10+00	82.11	4.49	187.11	11.61	1909.74	822.03	1087.71
10+00	10+50	86.29	8.05	193.91	13.99	2103.65	836.02	1267.63
10+50	11+00	88.23	7.06	206.07	12.41	2309.72	840.99	1468.73
11+00	11+50	97.23	6.34	208.42	10.94	2518.14	851.93	1666.21
11+50	12+00	90.35	5.48	195.64	11.09	2713.78	863.03	1850.76
12+00	12+50	85.73	6.5	183.24	15.68	2897.03	878.70	2018.33
12+50	13+00	79.19	10.43	184.30	13.06	3081.33	891.77	2189.56
13+00	13+50	86.68	3.68	203.61	6.43	3284.94	898.19	2386.75
13+50	14+00	96.57	11.55	213.04	19.84	3497.98	918.04	2579.95
14+00	14+50	95.17	9.88	215.21	16.94	3713.20	934.97	2778.22
14+50	15+00	98.52	8.41	157.16	20.88	3870.35	955.85	2914.50
15+00	15+50	42.92	14.14	85.07	61.14	3955.42	1016.99	2938.43
15+50	16+00	33.64	51.89	117.68	139.84	4073.10	1156.83	2916.26
16+00	16+50	72.27	99.14	80.30	91.80	4153.40	1248.63	2904.77
16+50	17+00	0	7.05	55.56	6.53	4208.95	1255.16	2953.79
17+92	18+00	0	0	0.00	0.00	4208.95	1255.16	2953.79
18+00	18+50	0	0	0.00	0.00	4208.95	1255.16	2953.79
18+50	19+00	0	0	25.60	5.30	4234.55	1260.45	2974.10
19+00	19+50	106.81	110.78	108.84	160.92	4343.39	1421.37	2922.02
19+50	20+00	70.89	63.01	168.94	76.57	4512.33	1497.94	3014.39
20+00	20+50	81.16	19.69	176.48	27.31	4688.81	1525.26	3163.55
20+50	21+00	77.67	9.81	178.07	15.00	4866.88	1540.26	3326.62
21+00	21+50	82.59	6.39	167.31	10.74	5034.19	1551.00	3483.19
21+50	22+00	67.99	5.21	134.27	14.28	5168.45	1565.28	3603.18
22+00	22+50	52.85	10.21	92.67	25.67	5261.12	1590.94	3670.18
22+50	23+00	30.55	17.51	111.73	28.55	5372.85	1619.49	3753.36
23+00	23+50	70.01	13.32	133.74	28.60	5506.60	1648.09	3858.51
23+50	24+00	50.36	17.57	105.94	39.10	5612.54	1687.19	3925.35
24+00	24+50	44.99	24.66	108.74	52.82	5721.29	1740.02	3981.27
24+50	25+00	52.88	32.39	138.02	59.98	5859.31	1800.00	4059.31
10'A'+00	11'A'+14	12.833	0	30.69	0	5890.00	1800.00	4090.00

PROJECT NO: 6996-05-07	HWY: PORTAGE CANAL	COUNTY: COLUMBIA	EARTHWORK	SHEET	E

FILE NAME : X:\16194-00\02001\TECH\cadd\Final Plans 2005\090101_ew.dgn

PLOT DATE : 12-21-2005

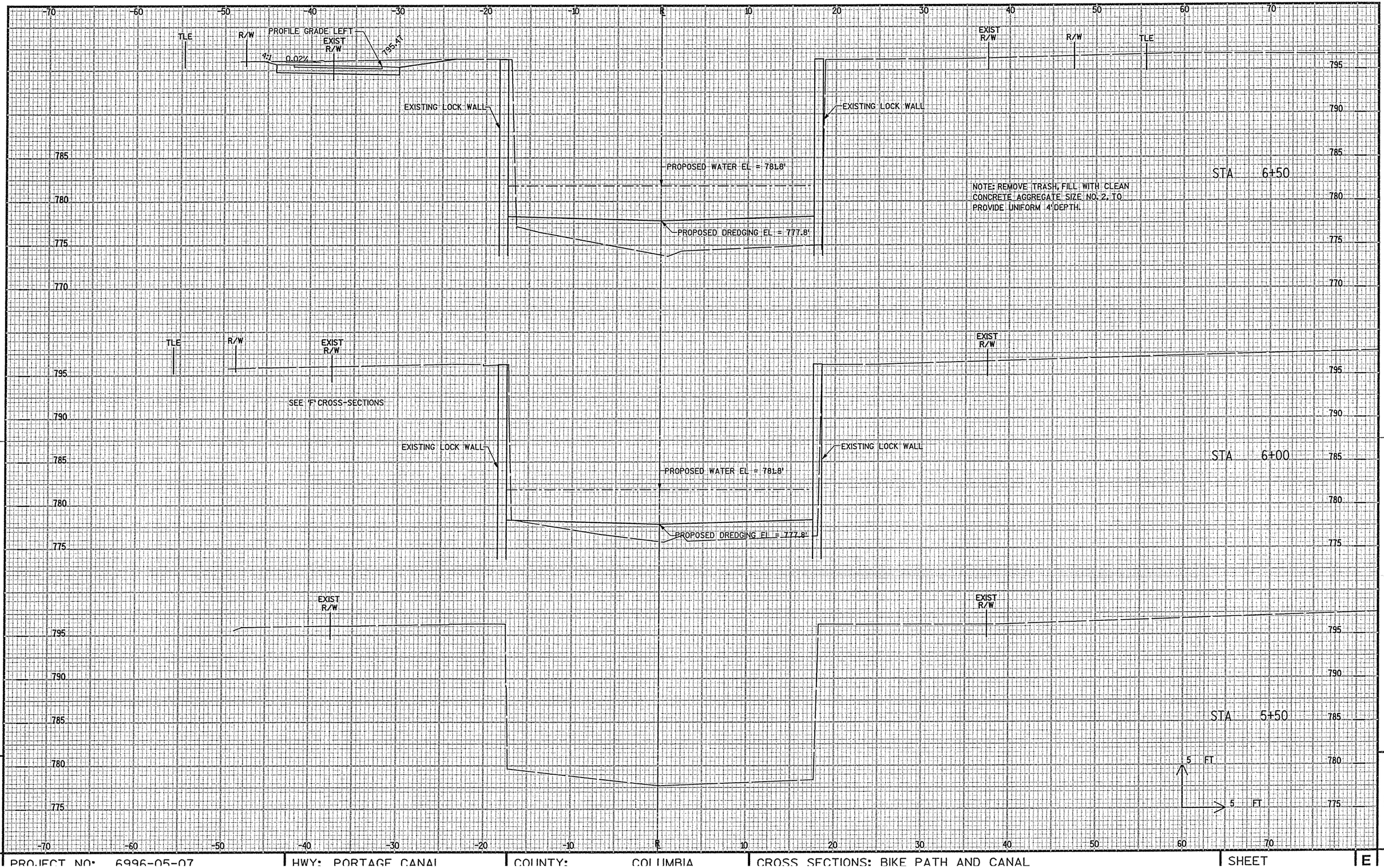

PROJECT NO: 6996-05-07	HWY: PORTAGE CANAL	COUNTY: COLUMBIA	CROSS SECTIONS: BIKE PATH AND CANAL	SHEET E

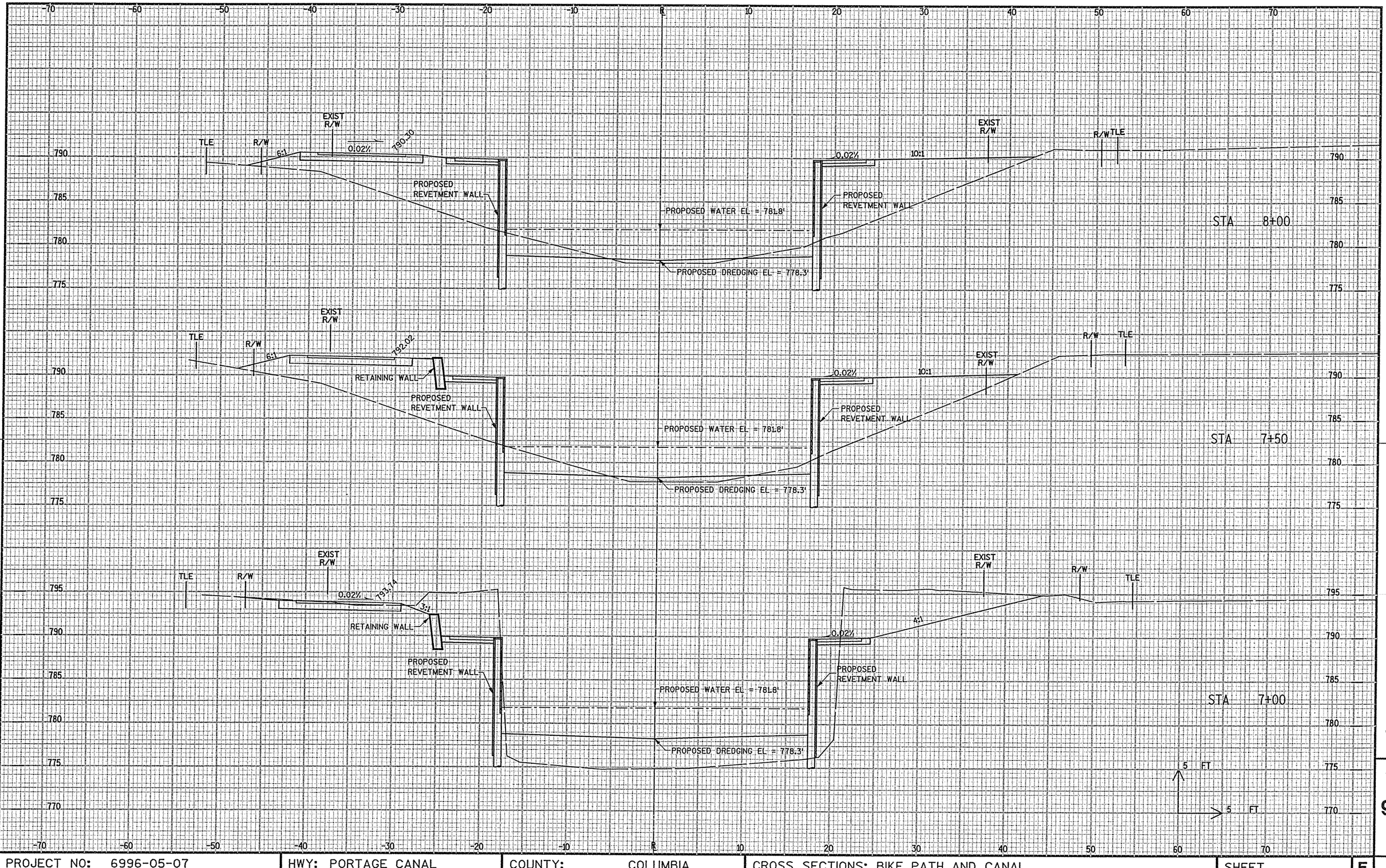

PROJECT NO: 6996-05-07	HWY: PORTAGE CANAL	COUNTY: COLUMBIA	CROSS SECTIONS: BIKE PATH AND CANAL	SHEET E

FILE NAME : x:\16194-00\02001\TECH\cadd\Final Plans 2005\090101_xs.dgn PLOT DATE : 10/27/2005 PLOT BY : Madison PLOT NAME : PLOT SCALE : 10.000 ' / IN

9

9

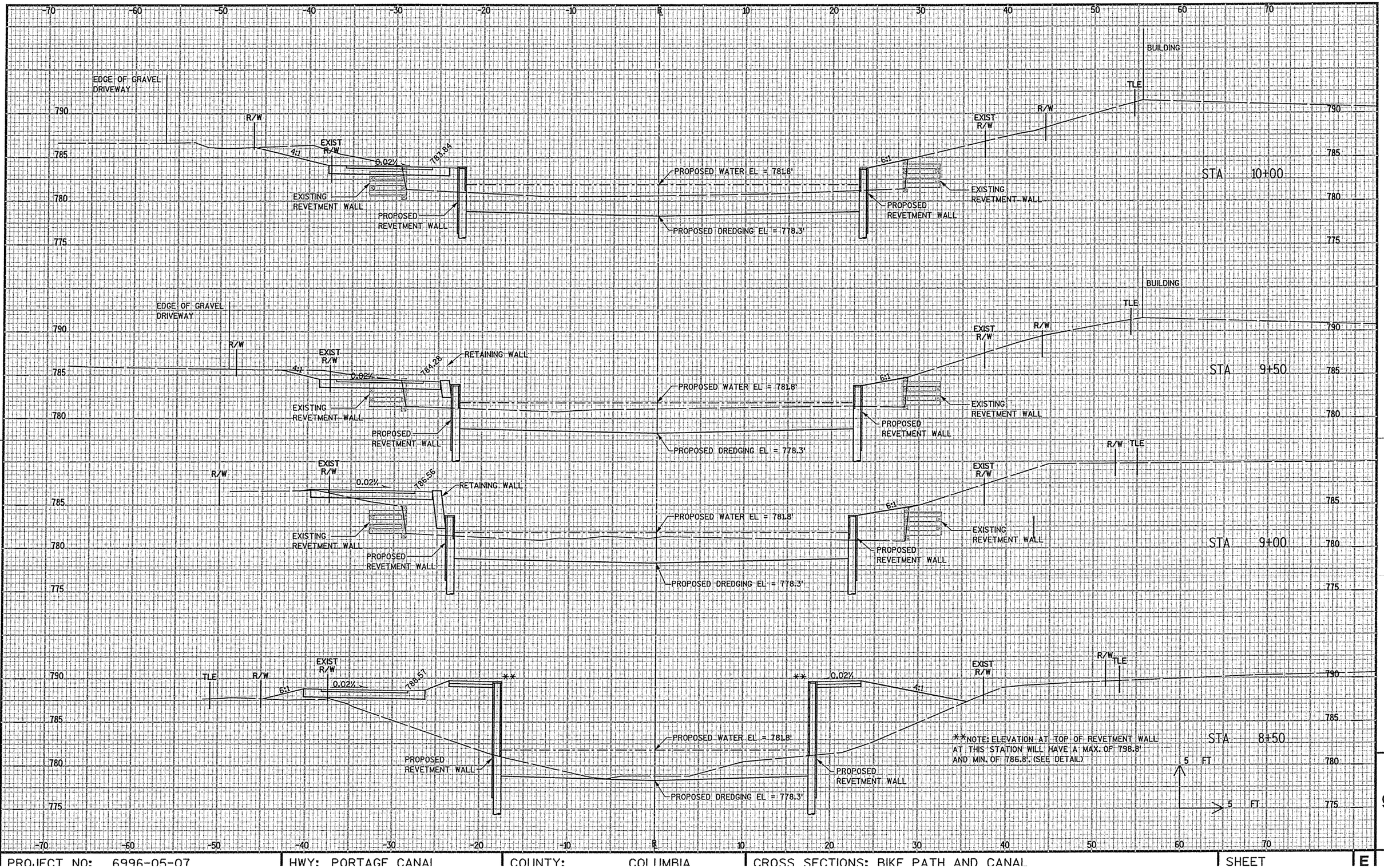

PROJECT NO: 6996-05-07	HWY: PORTAGE CANAL	COUNTY: COLUMBIA	CROSS SECTIONS: BIKE PATH AND CANAL	SHEET E

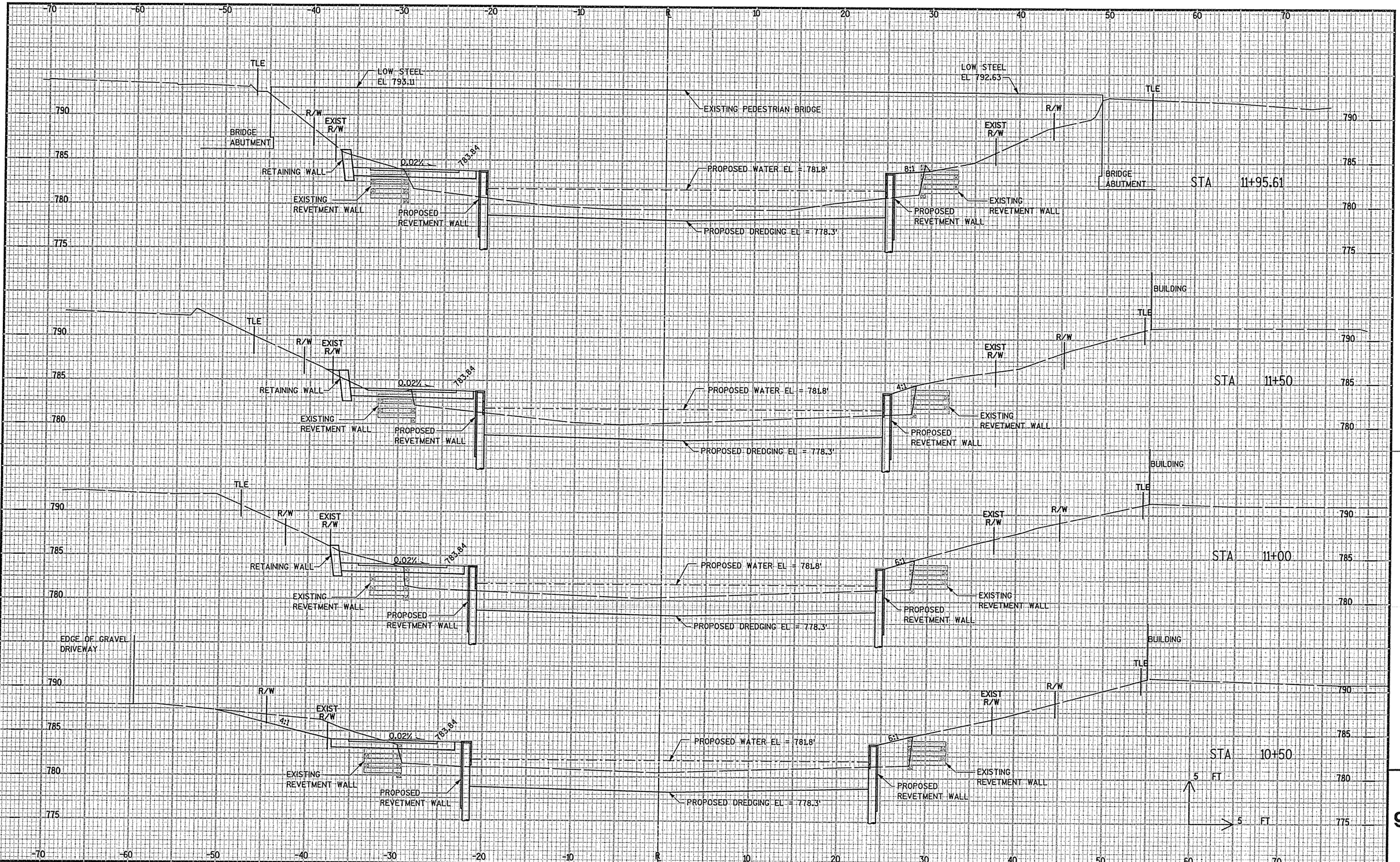

PROJECT NO: 6996-05-07	HWY: PORTAGE CANAL	COUNTY: COLUMBIA	CROSS SECTIONS: BIKE PATH AND CANAL	SHEET E

FILE NAME : x:\16194-00\02001\TECH\cadd\Final Plans 2005\090101_xs.dgn PLOT DATE : 10/27/2005 PLOT BY : Madison PLOT NAME : PLOT SCALE : 10.000 ' / IN.

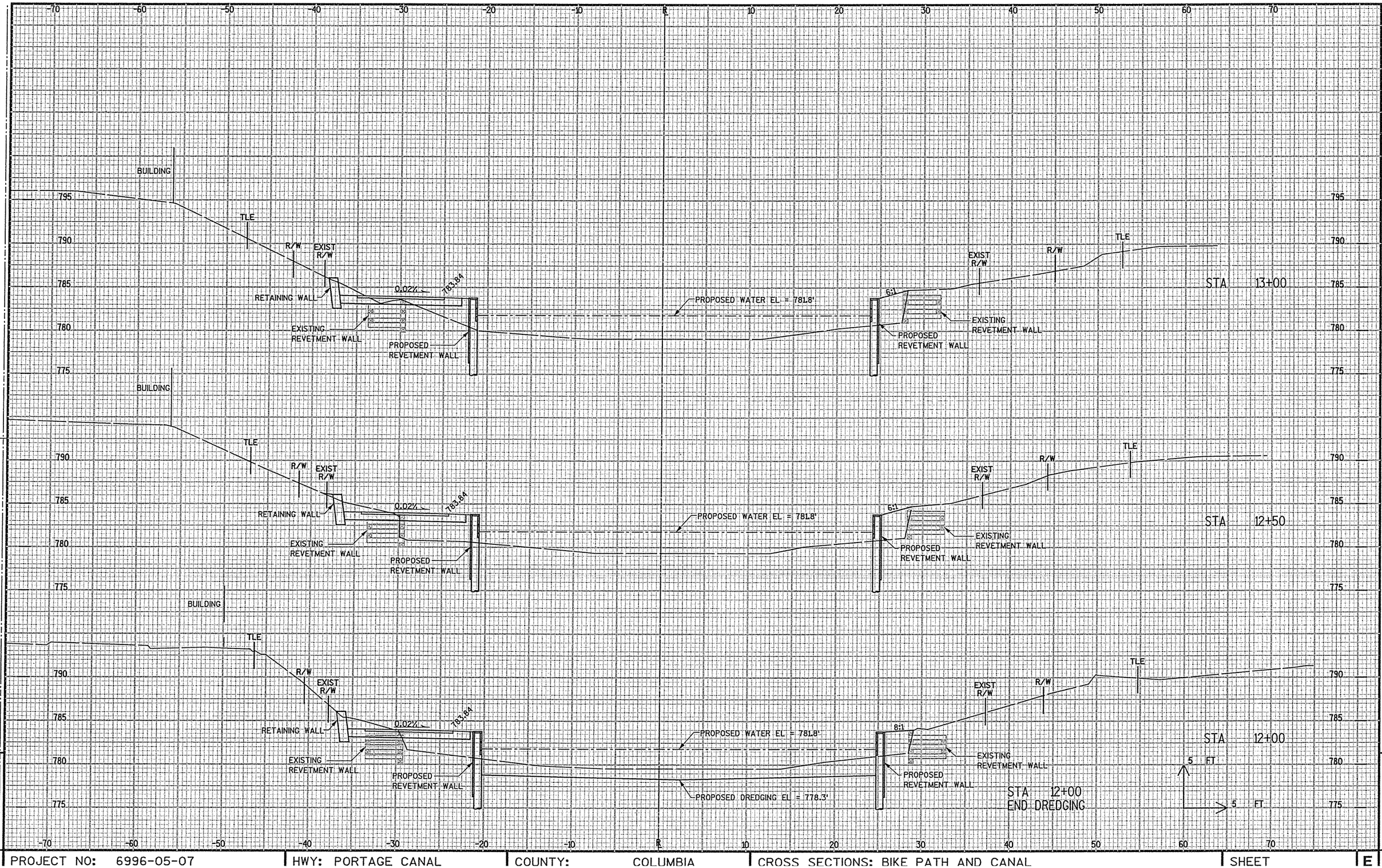

9

PROJECT NO: 6996-05-07	HWY: PORTAGE CANAL	COUNTY: COLUMBIA	CROSS SECTIONS: BIKE PATH AND CANAL	SHEET E

9

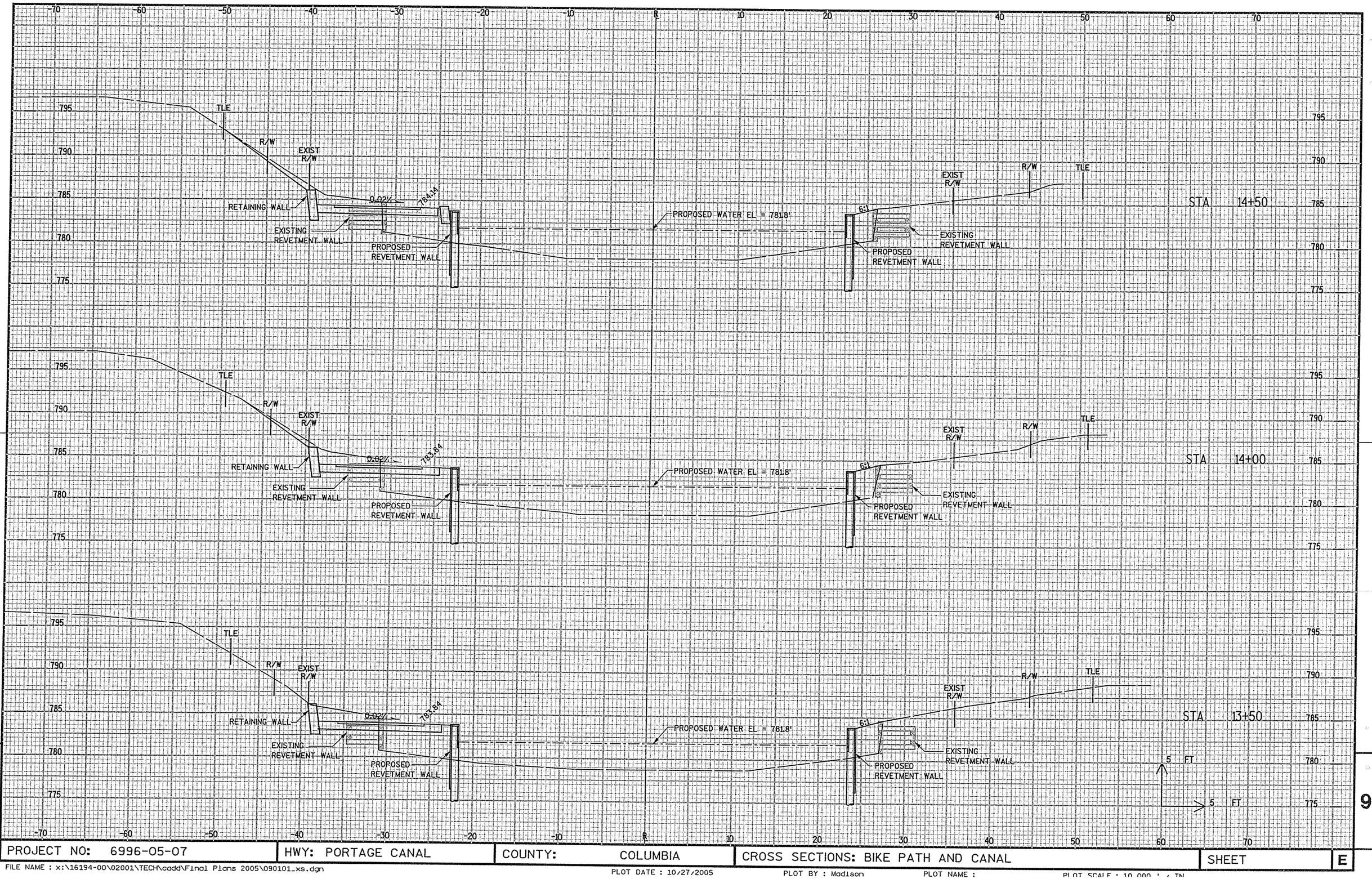

9

9

PROJECT NO: 6996-05-07	HWY: PORTAGE CANAL	COUNTY: COLUMBIA	CROSS SECTIONS: BIKE PATH AND CANAL	SHEET E

FILE NAME : x:\16194-00\02001\TECH\cadd\Final Plans 2005\090101_xs.dgn PLOT DATE : 10/27/2005 PLOT BY : Madison PLOT NAME : PLOT SCALE : 10.000 ' / IN

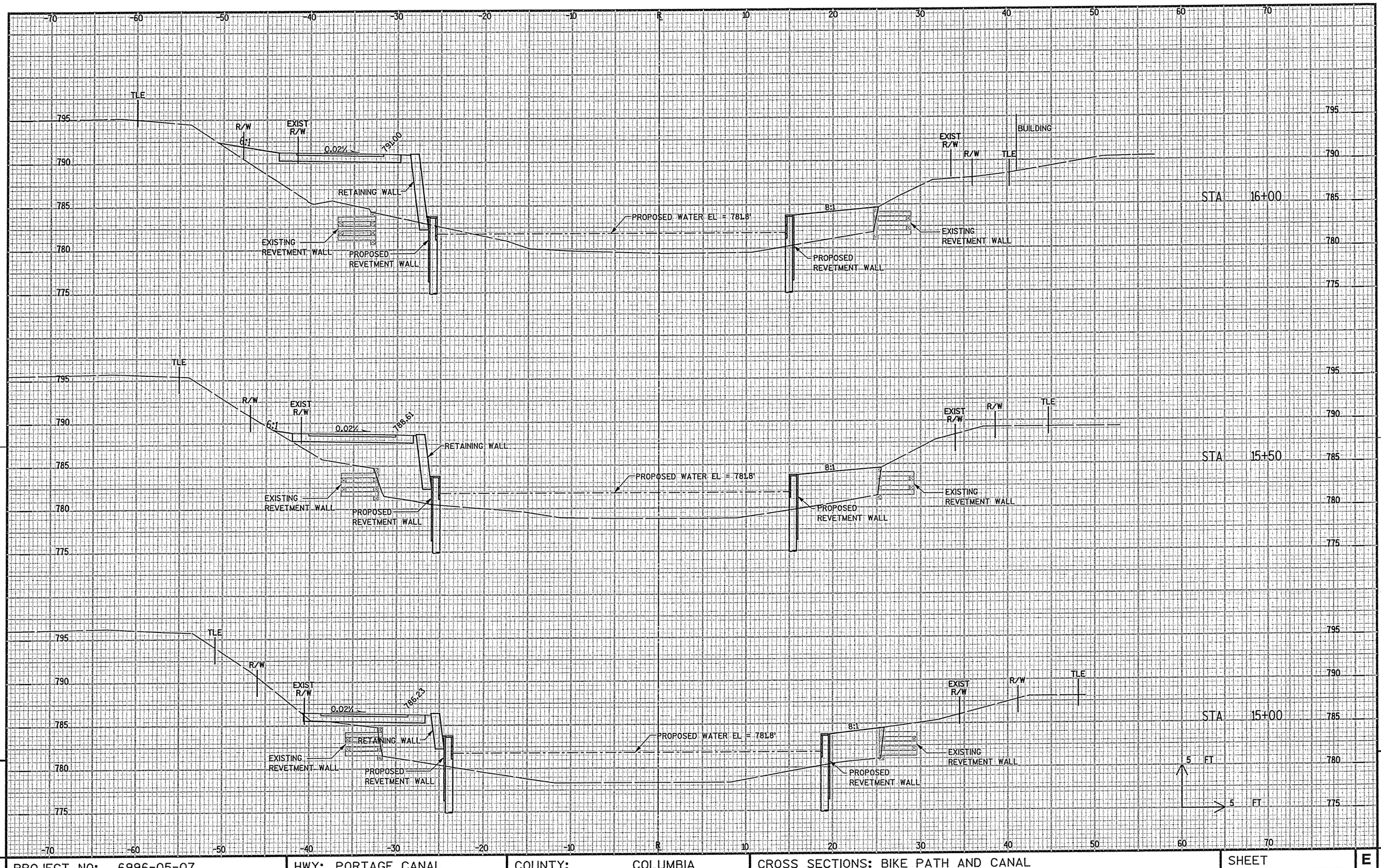

PROJECT NO: 6996-05-07	HWY: PORTAGE CANAL	COUNTY: COLUMBIA	CROSS SECTIONS: BIKE PATH AND CANAL	SHEET E

PLOT DATE : 10/27/2005 PLOT BY : Madison PLOT NAME : PLOT SCALE : 10.000 ' / IN. WISDOT/CADDS SHEET 21

9 9

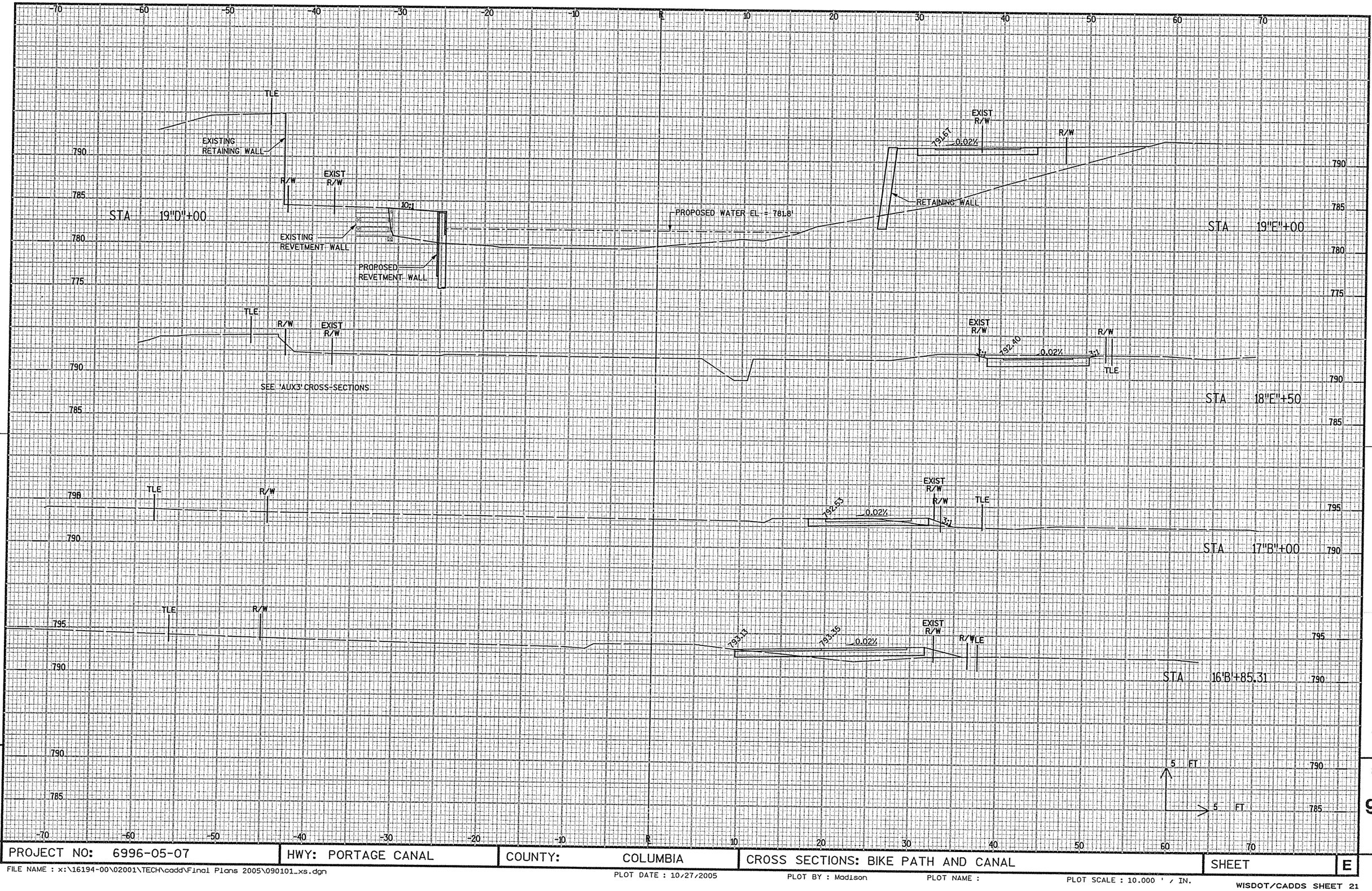

PROJECT NO: 6996-05-07	HWY: PORTAGE CANAL	COUNTY: COLUMBIA	CROSS SECTIONS: BIKE PATH AND CANAL	SHEET E

FILE NAME : x:\16194-00\02001\TECH\cadd\Final Plans 2005\090101_xs.dgn
PLOT DATE : 10/27/2005 PLOT BY : Madison PLOT NAME : PLOT SCALE : 10.000 ' / IN.
WISDOT/CADDS SHEET 21

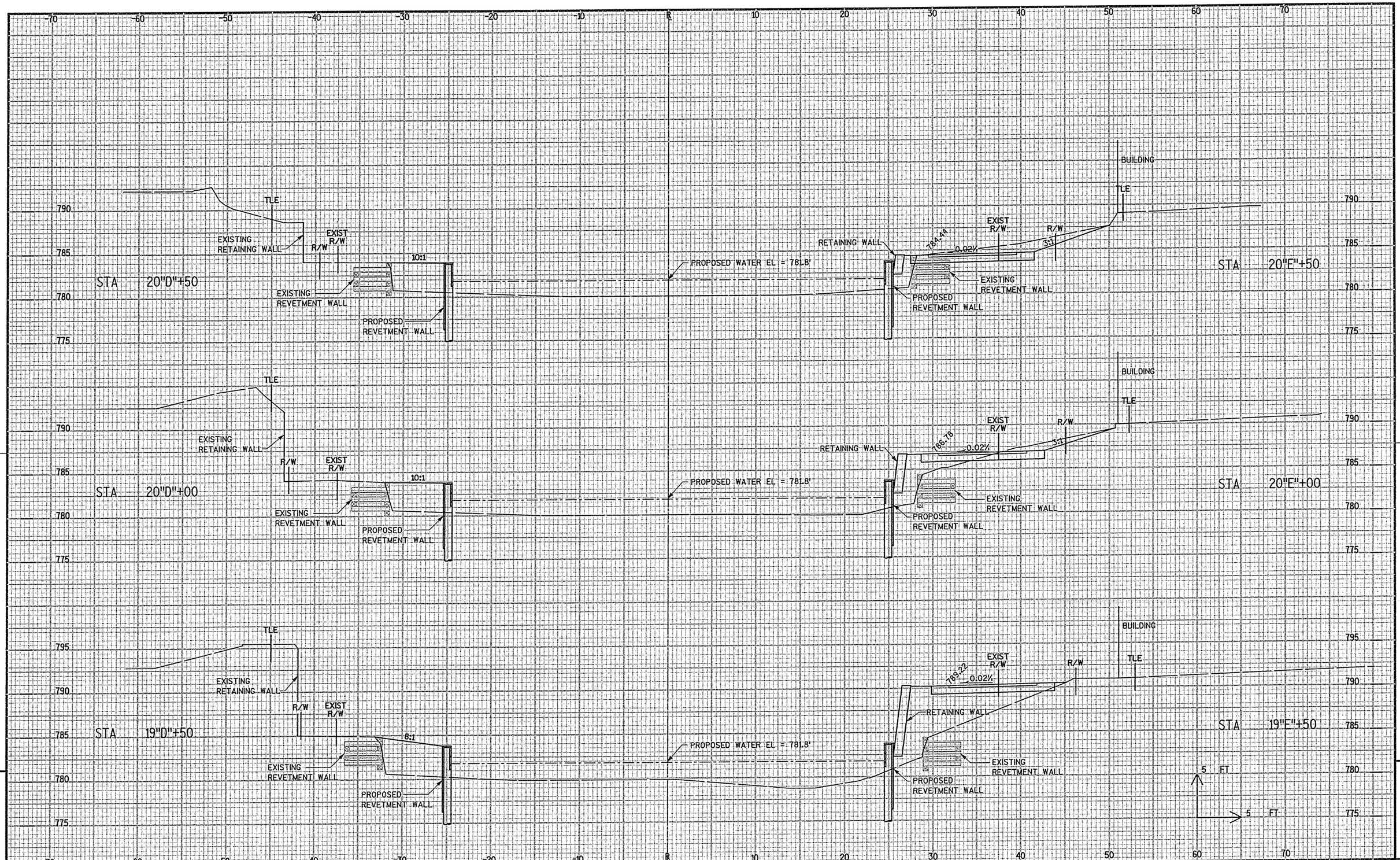

9

9

PROJECT NO: 6996-05-07	HWY: PORTAGE CANAL	COUNTY: COLUMBIA	CROSS SECTIONS: BIKE PATH AND CANAL	SHEET E

PLOT DATE : 10/27/2005 PLOT BY : Madison PLOT NAME : PLOT SCALE : 10.000 ' / IN. WISDOT/CADDS SHEET 21

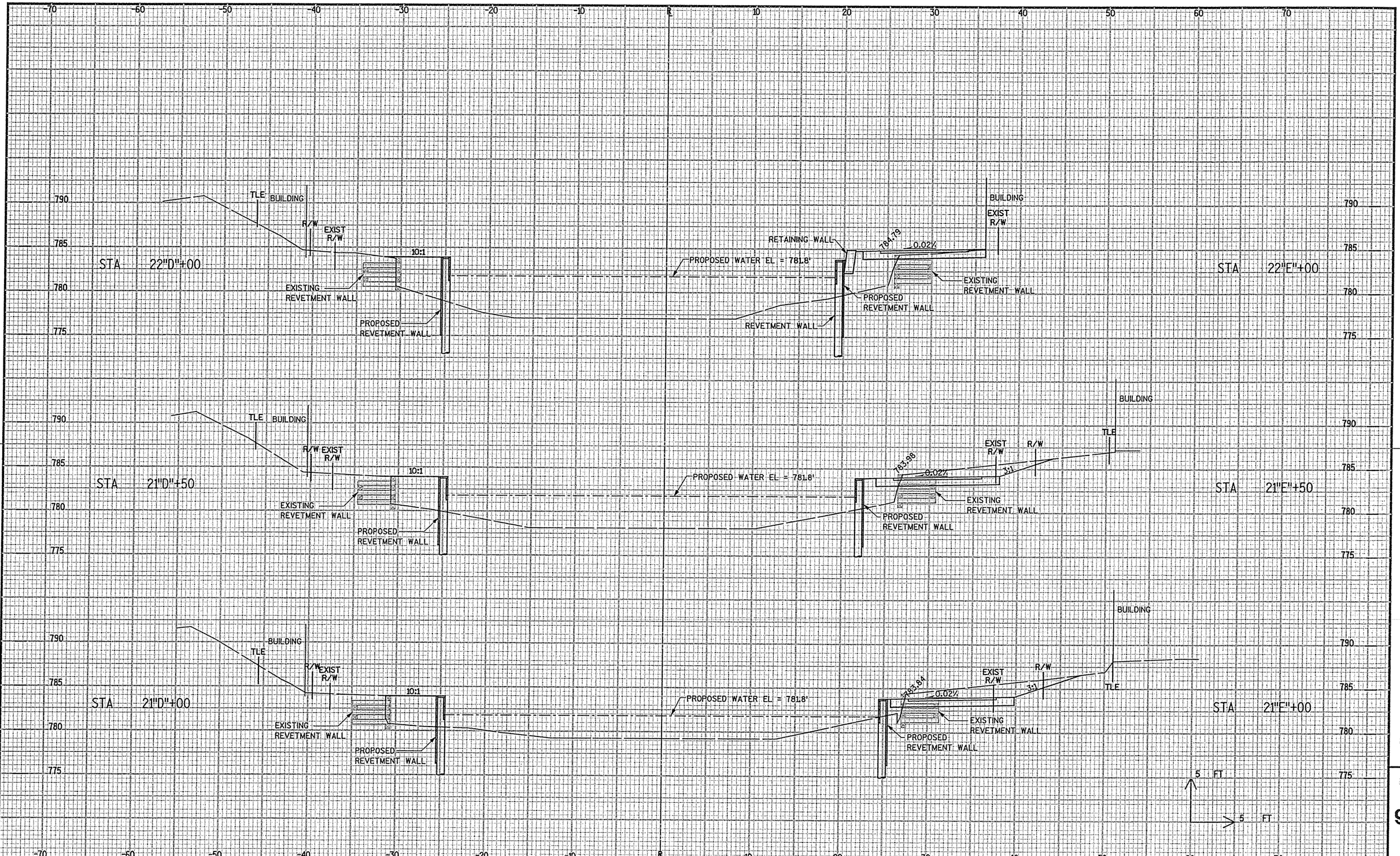

PROJECT NO: 6996-05-07	HWY: PORTAGE CANAL	COUNTY: COLUMBIA	CROSS SECTIONS: BIKE PATH AND CANAL	SHEET E

FILE NAME : x:\16194-00\02001\TECH\cadd\Final Plans 2005\090101_xs.dgn PLOT DATE : 10/27/2005 PLOT BY : Madison PLOT NAME : PLOT SCALE : 10.000 ' / IN.

WISDOT/CADDS SHEET 21

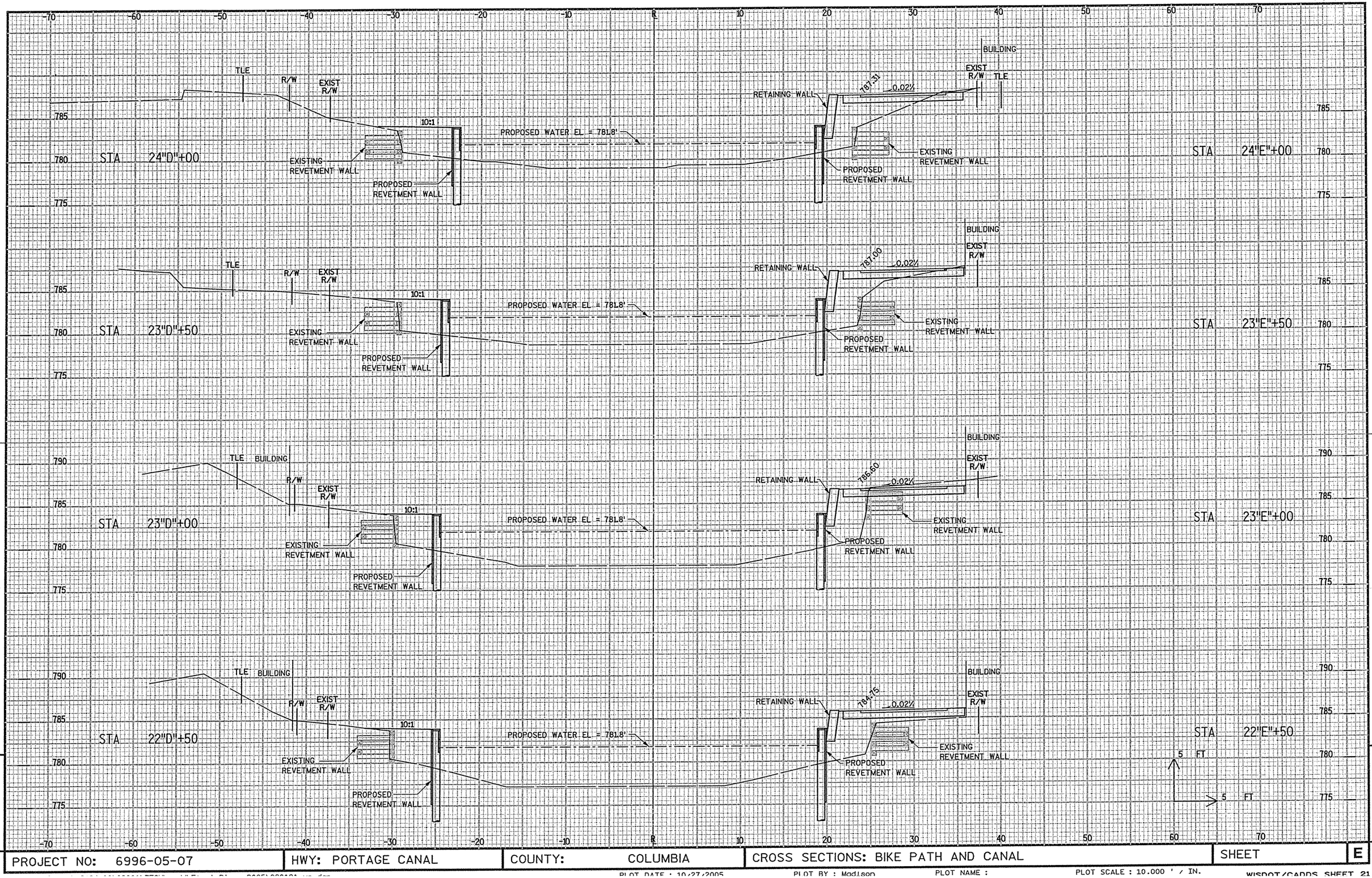

PROJECT NO: 6996-05-07	HWY: PORTAGE CANAL	COUNTY: COLUMBIA	CROSS SECTIONS: BIKE PATH AND CANAL	SHEET E

9

PLOT DATE : 10/27/2005 PLOT BY : Madison PLOT NAME : PLOT SCALE : 10.000 ' / IN. WISDOT/CADDS SHEET 21

STA 24"D"+50

EXISTING RETAINING WALL

TLE

EXIST R/W

10:1

EXISTING REVETMENT WALL

PROPOSED REVETMENT WALL

PROPOSED WATER EL = 781.8'

STA 25+00

BUILDING

EXIST R/W

TLE

RETAINING WALL

1.87 ft

0.02%

EXISTING REVETMENT WALL

PROPOSED REVETMENT WALL

STA 24"E"+50

5 FT

5 FT

9

9

PROJECT NO: 6996-05-07	HWY: PORTAGE CANAL	COUNTY: COLUMBIA	CROSS SECTIONS: BIKE PATH AND CANAL	SHEET E

FILE NAME : x:\16194-00\02001\TECH\cadd\Final Plans 2005\090101_xs.dgn

PLOT DATE : 10/27/2005 PLOT BY : Madison PLOT NAME : PLOT SCALE : 10.000 ' / IN.

WISDOT/CADDS SHEET 21

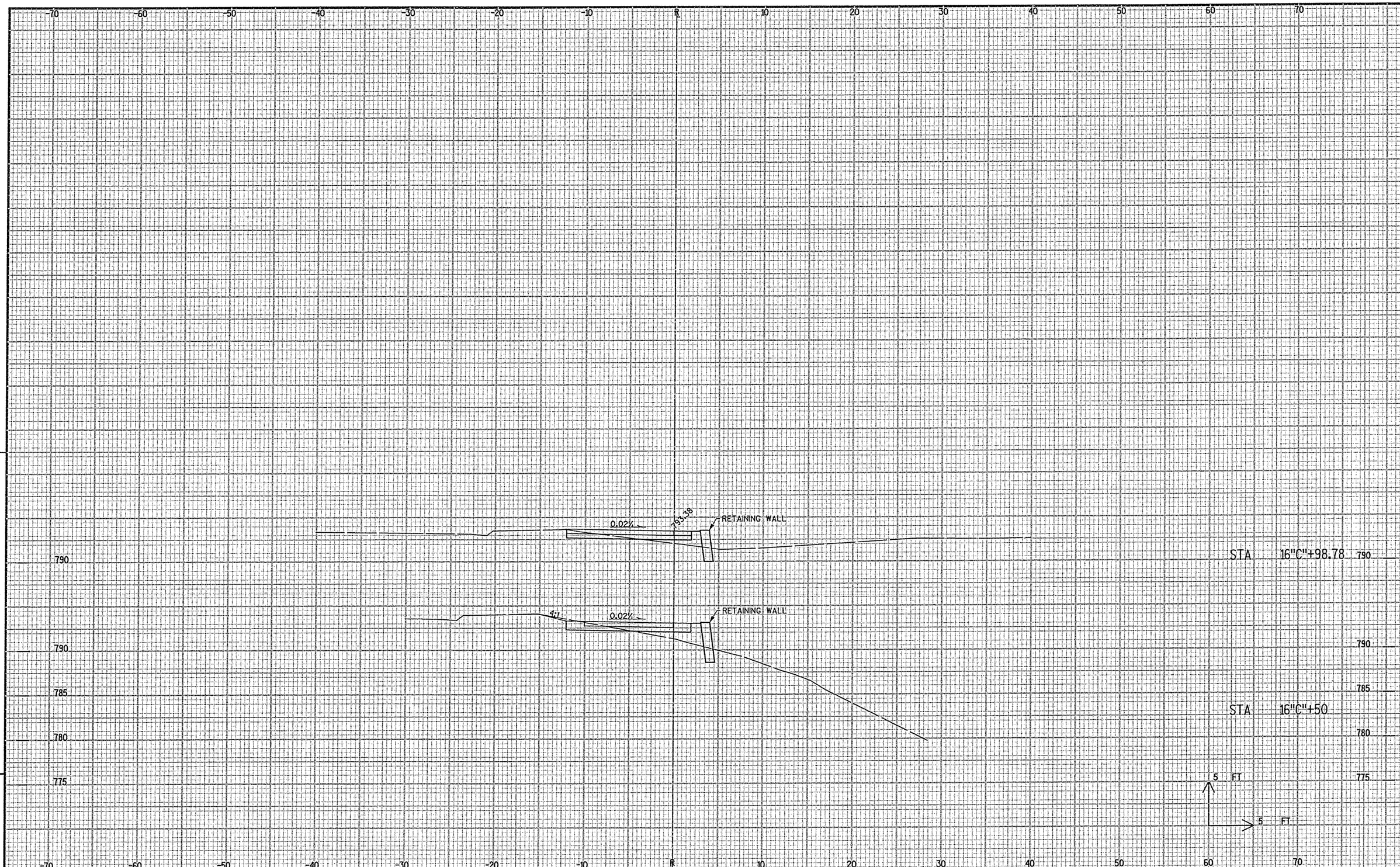

9

9

PROJECT NO: 6996-05-07	HWY: PORTAGE CANAL	COUNTY: COLUMBIA	CROSS SECTIONS: AUX 7	SHEET	E

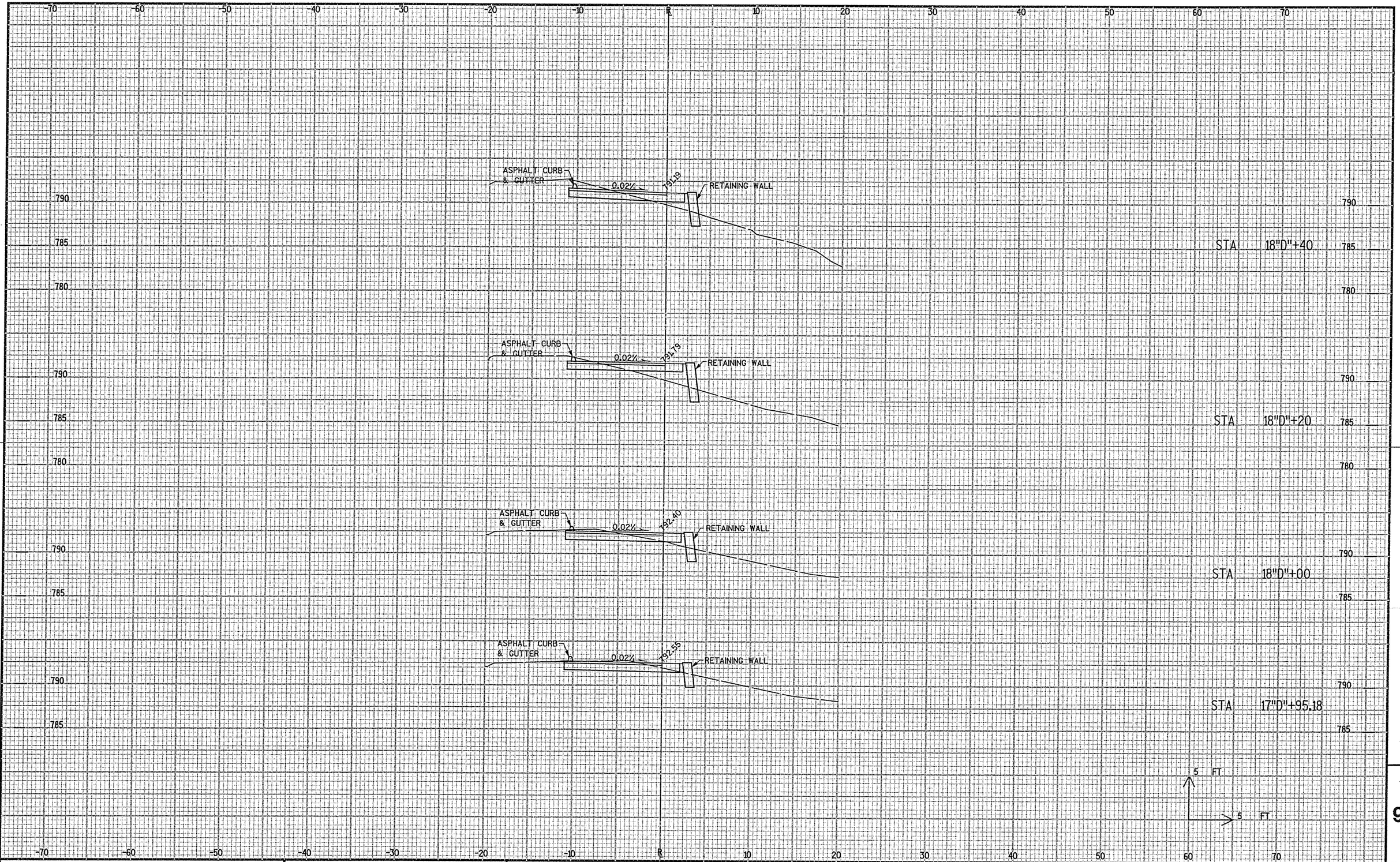

9

9

PROJECT NO: 6996-05-07	HWY: PORTAGE CANAL	COUNTY: COLUMBIA	CROSS SECTIONS: AUX 3	SHEET	E

FILE NAME : x:\16194-00\02001\TECH\cadd\Final Plans 2005\090101_xs.dgn PLOT DATE : 10/27/2005 PLOT BY : Madison PLOT NAME : PLOT SCALE : 10.000 ' / IN.

WISDOT/CADDS SHEET 21

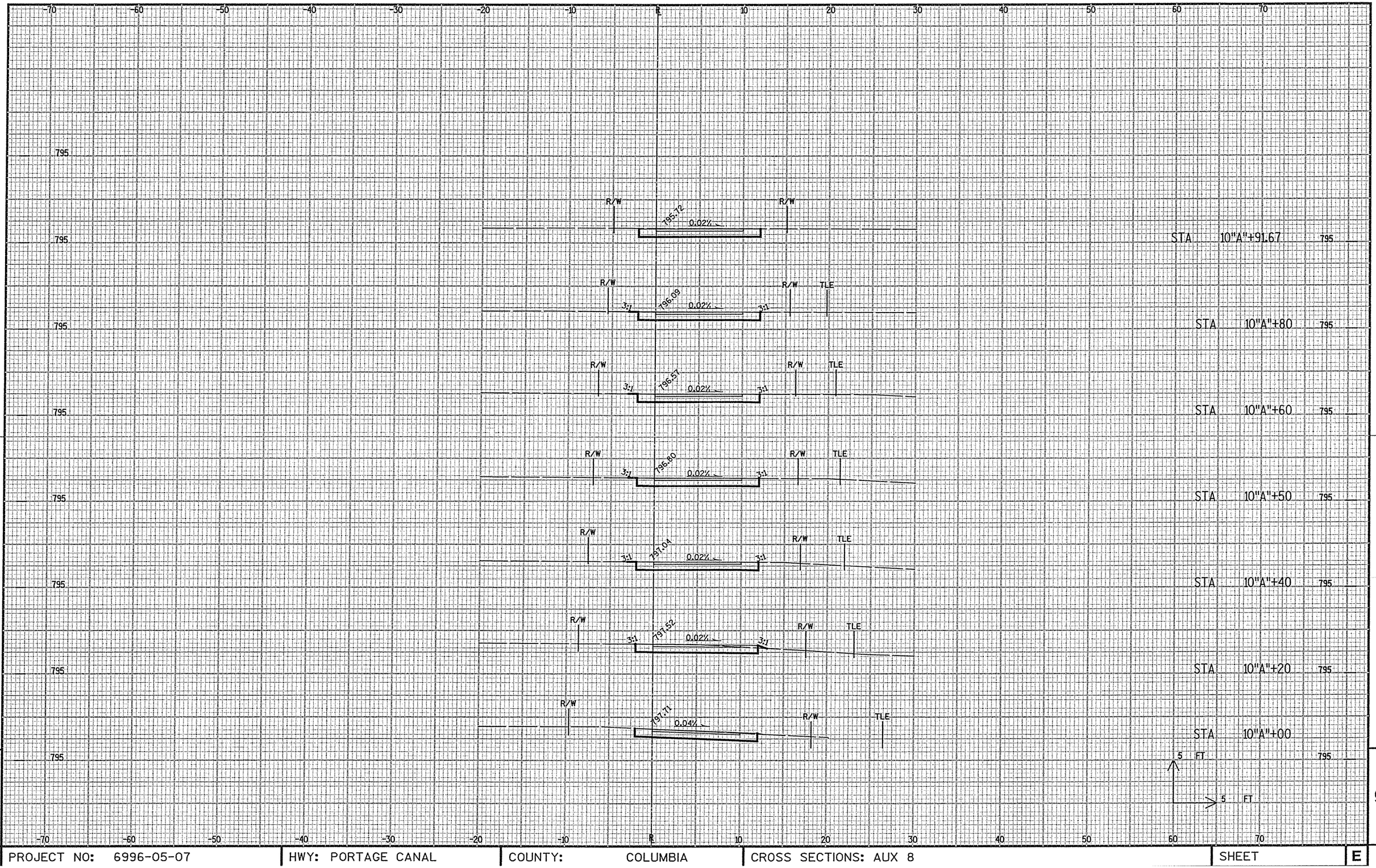

PROJECT NO: 6996-05-07	HWY: PORTAGE CANAL	COUNTY: COLUMBIA	CROSS SECTIONS: AUX 8	SHEET E

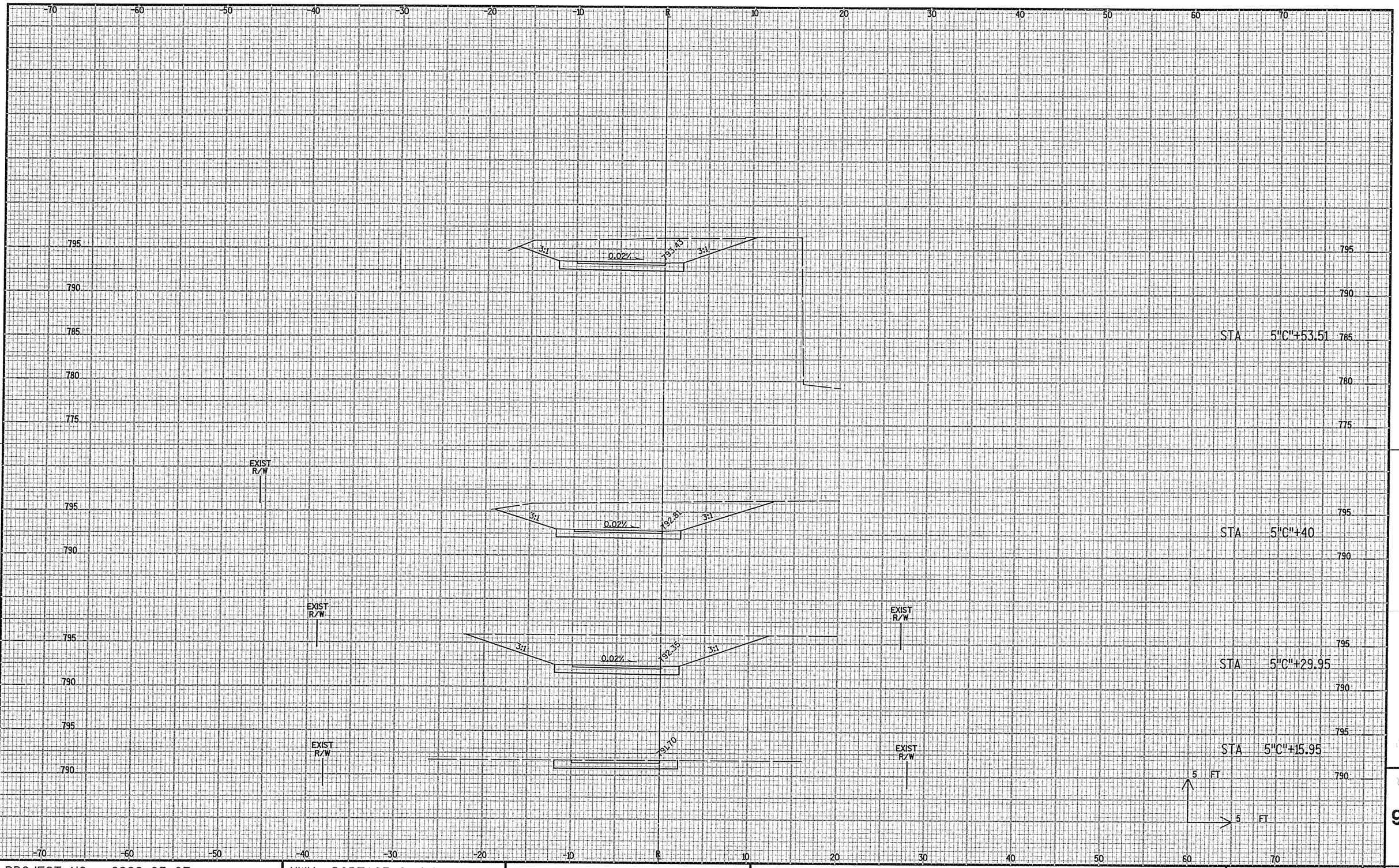

9

9

PROJECT NO: 6996-05-07	HWY: PORTAGE CANAL	COUNTY: COLUMBIA	CROSS SECTIONS: C	SHEET	E

FILE NAME : x:\16194-00\02001\TECH\cadd\Final Plans 2005\090101_xs.dgn PLOT DATE : 10/27/2005 PLOT BY : Madison PLOT NAME : PLOT SCALE : 10.000 ' / IN.

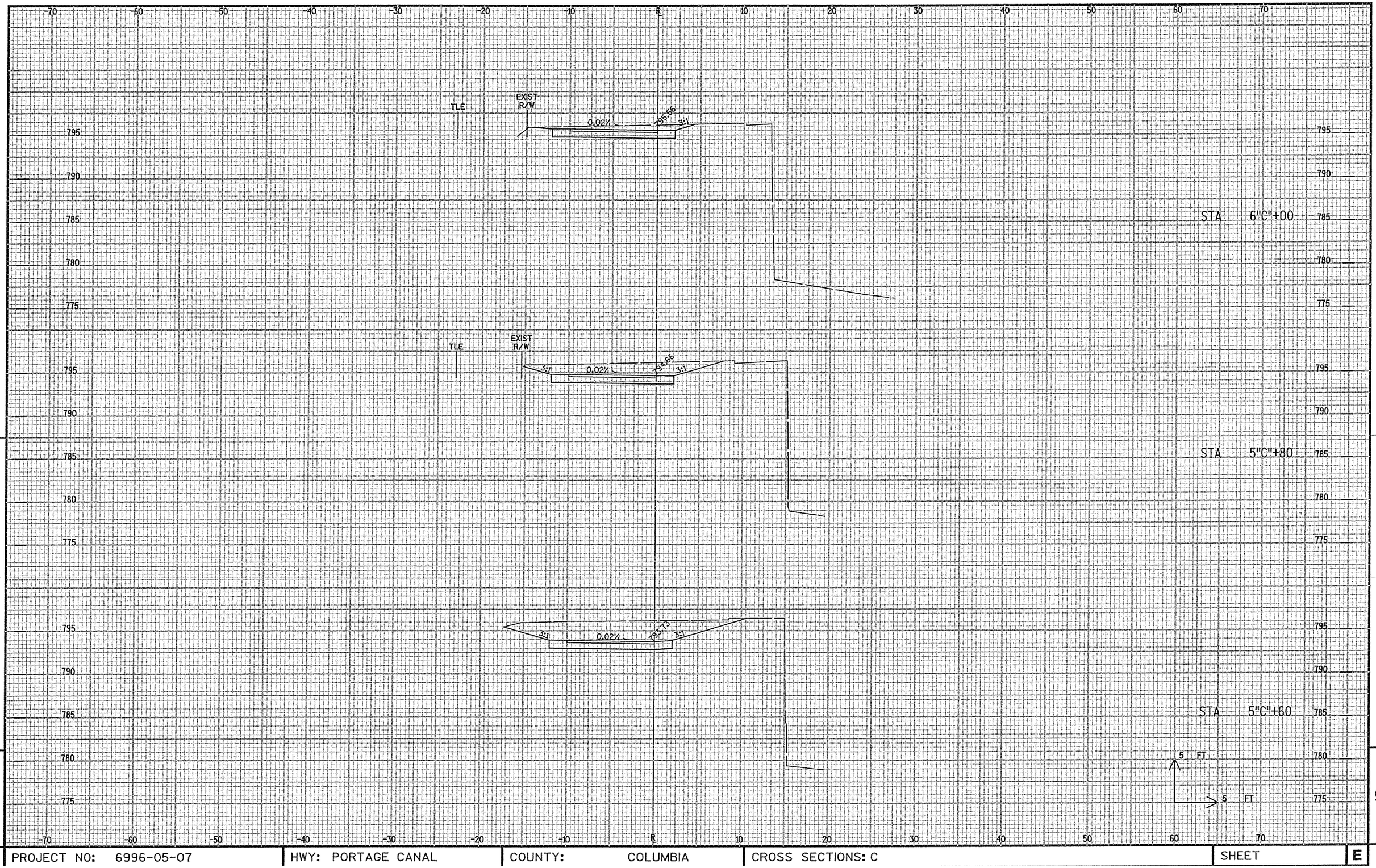

PROJECT NO: 6996-05-07	HWY: PORTAGE CANAL	COUNTY: COLUMBIA	CROSS SECTIONS: C	SHEET E

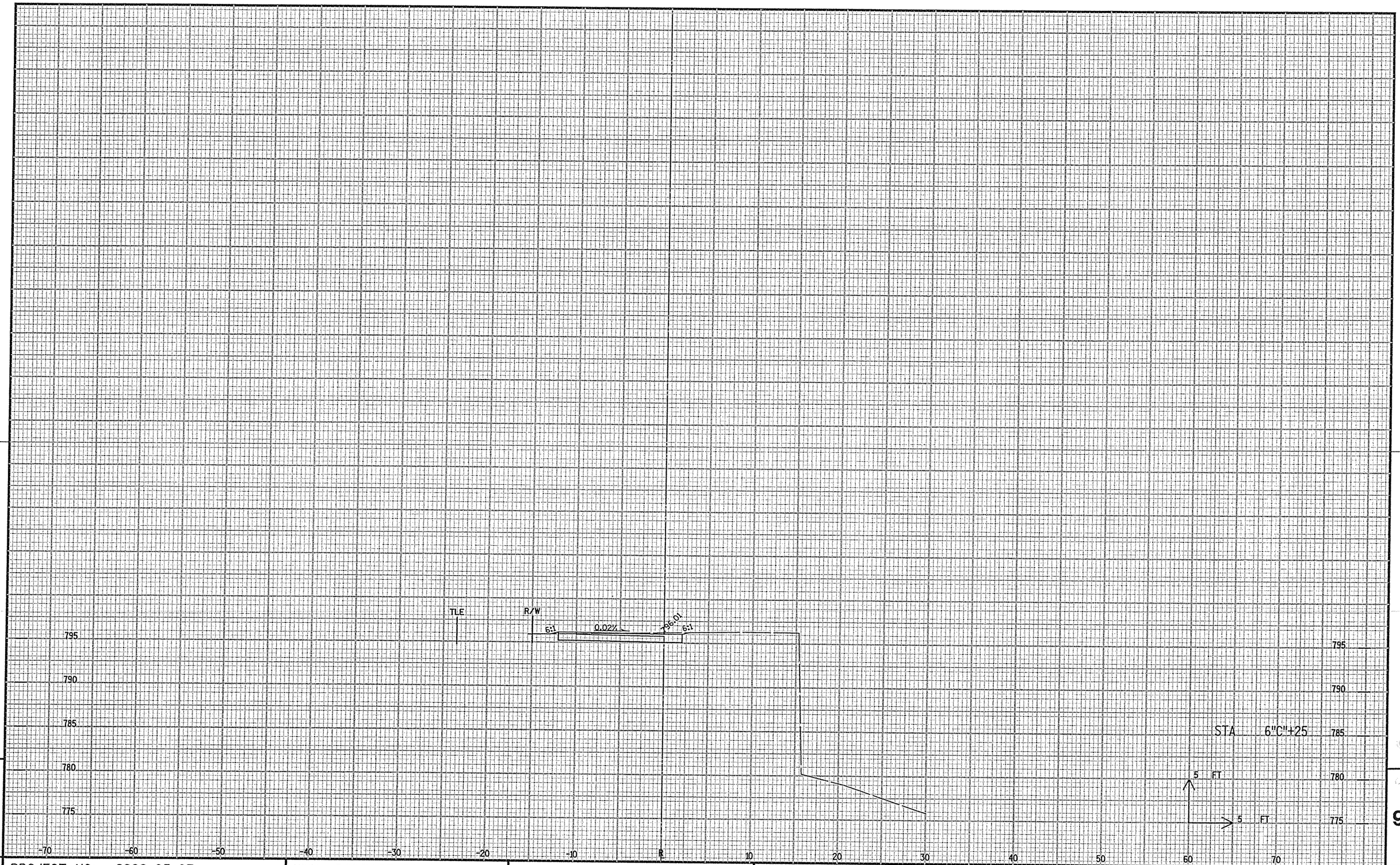

9

9

PROJECT NO: 6996-05-07	HWY: PORTAGE CANAL	COUNTY: COLUMBIA	CROSS SECTIONS: C	SHEET	E