City of Portage
Municipal Services and Utilities Committee
Thursday, January 7, 2015, 5:30 p.m.
Municipal Building, 115 West Pleasant Street
Conference Room One
Agenda

Members: Doug Klapper, Chairperson; Rick Dodd, Mary E. Hamburg, William A. Kutzke, Jeffrey F. Monfort

1. Roll Call

2. Approval of meeting minutes from meeting on Thursday, December 3, 2015.

3. Discussion and possible action the Preliminary Design Options for the City of Portage Water Department Maintenance Building.

4. Discussion and possible action on Rayovac Lift Station Project.

5. Update and schedule for the River Street Reconstruction Project

6. Update and schedule for 2016 facility, water utility, waste water, building and infrastructure capital projects.

7. Public Works Director's Report: future meetings.

    - I-39/STH 16 Tuesday, January 26th Local Officials Meeting: 4:00 pm to 5:00 pm Public Information Meeting: 5:30 pm to 7:00 pm

    - USH 51 (City of Portage, Wisconsin & Dewitt Streets) Progress Meeting #4 Thursday, February 11th at 10 a.m.

8. Adjournment

If you require special accommodations for the meeting, please contact the City Clerk's Office at 608-742-2176, no later than 48 hours prior to the meeting.

City of Portage
Municipal Services and Utilities Committee Meeting
Thursday December 3, 2015, 5:30 p.m.
Municipal Building, 115 West Pleasant Street, Conference Room One
Minutes

Members Present: Doug Klapper, Chairperson; Mary E. Hamburg; Jeffrey F. Monfort William A. Kutzke.

Others Present: Bob Redelings, Public Works Director; Tammy O'Leary; Public Works Secretary; Bill Welsh, CATV; Craig Sauer; PDR; Richard Smith; GEC; Dave Hornisher, Wastewater Superintendent; Kevin Bortz; Water Superintendent; Kim Standke; Public Works Superintendent .

Excused: Rick Dodd

1. Roll Call

The meeting was called to order at 5:31 p.m.

2. Approval of meeting minutes from meeting on Thursday November 5, 2015.

Motion by Hamburg second by Kutzke to approve the minutes from November 5, 2015.

Roll Call 4-0. Passed

3. Discussion and possible action on street lighting for River Street.

Director Redelings referenced the email from Ben Neumann about the lack of street lights in the first part of the 100 block of River Street. Redelings indicated street lights are about 400 feet apart between W. Wisconsin Street and the first curve on River Street. Four hundred feet is considered the maximum spacing for street light. It costs about $2,000 to $3,000 to install a pole and roughly $30 to $40 a month in energy costs. Continue discussion at next meeting with more exact cost estimates.

No action at this time.

4. Discussion and possible action on the Hwy 51 reconstruction project.

Redelings referenced the public information meeting with DOT on numerous options for intersections and driving lanes. Discussion to narrow down some of the alternatives for the Hwy project. Committee discussed multiple options with consideration given to traffic flow, pedestrians, bike paths and local business. Further discussion at future meetings.

Motion made by Klapper second by Kutzke to not exceed 44 feet of street width for the DeWitt Street segment of the project.

Roll Call 4-0. Passed

5. **Discussion and possible action on (south) water tower painting project.**

Redelings stated a contractor recently did some additional tests on the tower and concluded the painting project could be pushed out a few years. Redelings stated there is some repair work and touch up painting needed. The cost will be approximately $15,000.

No action taken.

6. **Update on Public Work operations (includes levee brushing program).**

Public Works Superintendent Standke stated the City hired the County to mow south of the rip rap areas from Trecek going south. The County had spent around 25 hours mowing along the levee with their boom mower. The City is waiting for the area to freeze so they can do some brush clean up with possibly the assistance of volunteers from Renewal Unlimited. Standke will be contacting the DNR to see if there is anything that can be sprayed on the areas to prevent future brush growth along the waterway. Standke stated the goal is to do a 1/3 of the area yearly to keep up with levee maintenance.

No action taken.

7. **Update on Water Works operations.**

Richard Smith (GEC Architect) gave an overview of the 3 options of the new Water Maintenance Facility. Redelings stated the staff recommends (option 1) the largest square footage ($10,250 sq. ft.) for optimizing space for the garage and future growth. Smith stated with this option there was limited snow storage. The smallest square footage - option 2 gives more snow storage with less garage space. The last option (option 3) has 10,250 sq. ft. with a different building layout.

The committee requested cost estimates for all 3 options for further discussion at next month's meeting.

No action taken.

8. Update on Wastewater operations (includes status of Ray-O-Vac lift station project).

Redelings stated that the Ray-O-Vac lift station is currently located on airport property. With the airport looking at making improvements to the property, an option to relocate the lift station from Airport property is being considered. The Bureau of Aeronautics verbally stated they would financially help with removal of the lift station from the runway clear zone.

Waste Water Director Hornisher discussed some of the ongoing issues with the pump station and Columbia Correction Institute with the amount of debris that is making its way in to the system and clogging the pumps. Hornisher stated with the new lift station a vertical screen could be added to help with removing debris.

Redelings stated the 5 year WPDES permit with the DNR has just been received. The City has 2 weeks to review and draft a permit prior to the 30 day public comment period.

Redelings did state that Standke, Bortz and Hornisher have completed their training and received certificates in Public Works Management.

9. Public Works Report

- Update on Removal of E. Cook St. and E. Wisconsin St from National Highway System (NHS)-Redelings stated based on comments provided at the public information meeting there was no benefit to keeping the segments on the system so they were removed.

- Update on Canal Projects (City, DNR) - Redelings state the City and DNR are progressing with the respective projects. The DNR should have their study done within a year. So a budget request will go before the legislative.

- Update on Columbia County Gateway Project- Redelings stated the City and County have been working closely together bring their site approval and Conditional Use permit to Plan Commission on Dec. 21st. The DNR recognizes the cleanup of the canal in that area at the time the building are removed and before the new building erected. The segment of the canal to be cleaned up is between Dewitt and Adams and could occur in spring of 2016.

- Update on STH 33 (Cook St.) study.-Redelings stated the project has been separated to 3 segments (Baraboo, Portage and Rural Segment) this will go on for a couple of years.

- Update on STH16/I39 Project-Redelings stated intersection of STH 127 and STH16 is being analyzed for signalization or a roundabout. The project will entail

street resurfacing of Hwy 16 from Boeck Rd. to the railroad bridge on the east end. Possible construction in 2017.

10. Adjournment

Chairperson Klapper adjourned the meeting at 7:04 p.m.

Prepared by Tammy O'Leary, Public Works Secretary.

To: Municipal Services and Utilities Committee

From: Aaron J. Jahncke, P.E., Director of Public Works/ City Engineer

Date: 12/29/15

Subject: **City of Portage Water Department Maintenance Building**

Background:
The City of Portage is in the preliminary design phase for the addition to the Water Department Building located at 135 Northridge Dr. that will include Maintenance Building which is currently in a separate building located at 701 W. Slifer St. After the building addition is completed the water department will have a centralized office and maintenance building with an improved maintenance building layout for vehicle storage. Currently a portion of the water department's vehicles are stored outside.

Analysis:
The City is currently working with Richard Smith from General Engineering. Mr. Smith has developed three preliminary options for the committee's review. Please see Mr. Smith's memo that includes pros/cons, estimated costs, and the floor plans for all three options. Staff's preference would be option #1. Option #1 is the most expensive option but it also gives staff the largest floor plan of the three. It also provides optimal vehicle flow and designated parking stalls for municipal equipment. Option #1 allows staff to access the storage area over the storage tank without having to move any vehicles and would allow for one or two additional pieces equipment or vehicle storage in the future. The water department could possibly store the generator, lawn mower and vacuum trailer above the storage tank area while still maintaining access to the generator and the vacuum trailer in an emergency situation.

Fiscal Note:
There is no immediate fiscal impact, the Municipal Services and Utilities Committee and the City Council will ultimately have to approve the final contract amount with the award of the project later this year. The project was originally budgeted at $1,200,000.00 any additional costs above the budgeted amount would have also have to be approved by the Finance Committee as well.

Recommendation:
It is staff's recommendation that the Municipal Services and Utilities Committee favorably endorse preliminary design Option #1. This will allow staff to proceed to the final design phase and bid the project later this year.

Aaron J. Jahncke
Director of Public Works/ City Engineer

Attachment(s)
General Engineering Memo to Bob Redelings dated 12/23/15

General Engineering Company
P.O. Box 340
916 Silver Lake Drive
Portage, WI 53901

608-742-2169 (Office)
608-742-2592 (Fax)
gec@generalengineering.net
www.generalengineering.net

Engineers • Consultants • Inspectors

MEMO

TO: **Bob Redelings, Director of Public Works**

FROM: Richard Smith, AIA

DATE: **December 23, 2015**

SUBJECT: **City of Portage Water Dept. Maintenance Facility**
Cost Opinions for Schematic Design Options # 1, 2 & 3
GEC # 2-0115-1G1

GEC has complied the following Preliminary Cost Opinions for the (3) Schematic Design Options developed by GEC for the new Water Department's Maintenance Facility. We have included a list of Pros & Cons for each option.

Note: Preliminary Cost Opinion includes in-floor hydronic heating system for the entire building addition.

OPTION 1 (10,320 square feet) Preliminary Cost Opinion: $ 1,330,000.00

Pro's:

- Good maintenance vehicle flow
- Good access to mezzanine storage area
- Good access to storage area over underground tank
- Front entry from parking spaces

Con's:

- Tight exterior staff parking lot
- Parking lot exit's curb cut is very close to street intersection

OPTION 2 (9,900 square feet) Preliminary Cost Opinion: $ 1,280,000.00

Pro's:

- Staff parking lot located at the rear of the building
- Maintenance vehicle flow is reversible
- Larger parts storage room
- Front & Rear entry vestibules
- Larger men's locker room

Con's:

- Tighter maintenance vehicle parking/traffic flow
- Parked vehicles would need to be moved for access to mezzanine storage & storage area over underground tank

OPTION 3 (10,000 square feet) Preliminary Cost Opinion: $ 1,290,000.00

Pro's:

- Staff parking lot located along side of building
- Good access to mezzanine storage area
- Larger Men's locker room
- Maintenance vehicle flow is reversible

Con's:

- No front entry access to administration area
- Spare parts storage is separated from administration area
- Maintenance vehicles would need to be moved for access to storage area over underground tank

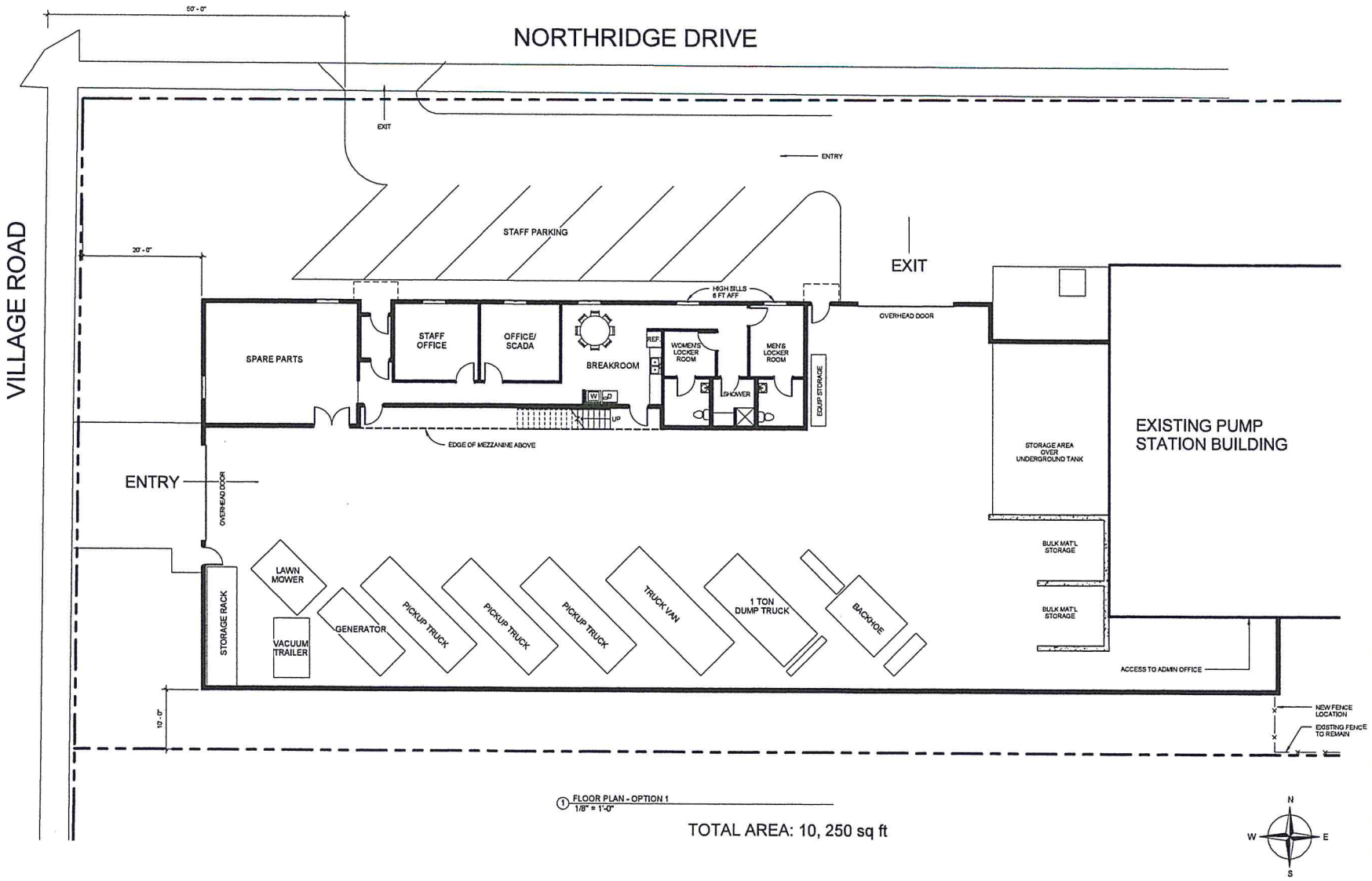

1 FLOOR PLAN - OPTION 1
1/8" = 1'-0"

TOTAL AREA: 10, 250 sq ft

REVISED OPTION -1

PORTAGE WATER DEPT ADDITION

12/1/15

GEC
608.742.2169 | 916 Silver Lake Dr. | Portage, WI 53901
www.generalengineering.net

G:\Current Files L-Q\Portage\2015 Projects\2-2015-1G Water Dept. Maintenance Facility\CAD 2-2015-1G\1_ARCH 2-2015-1G Portage Water Dept Addition - Option 1 - Revised - 12.01.15.rvt

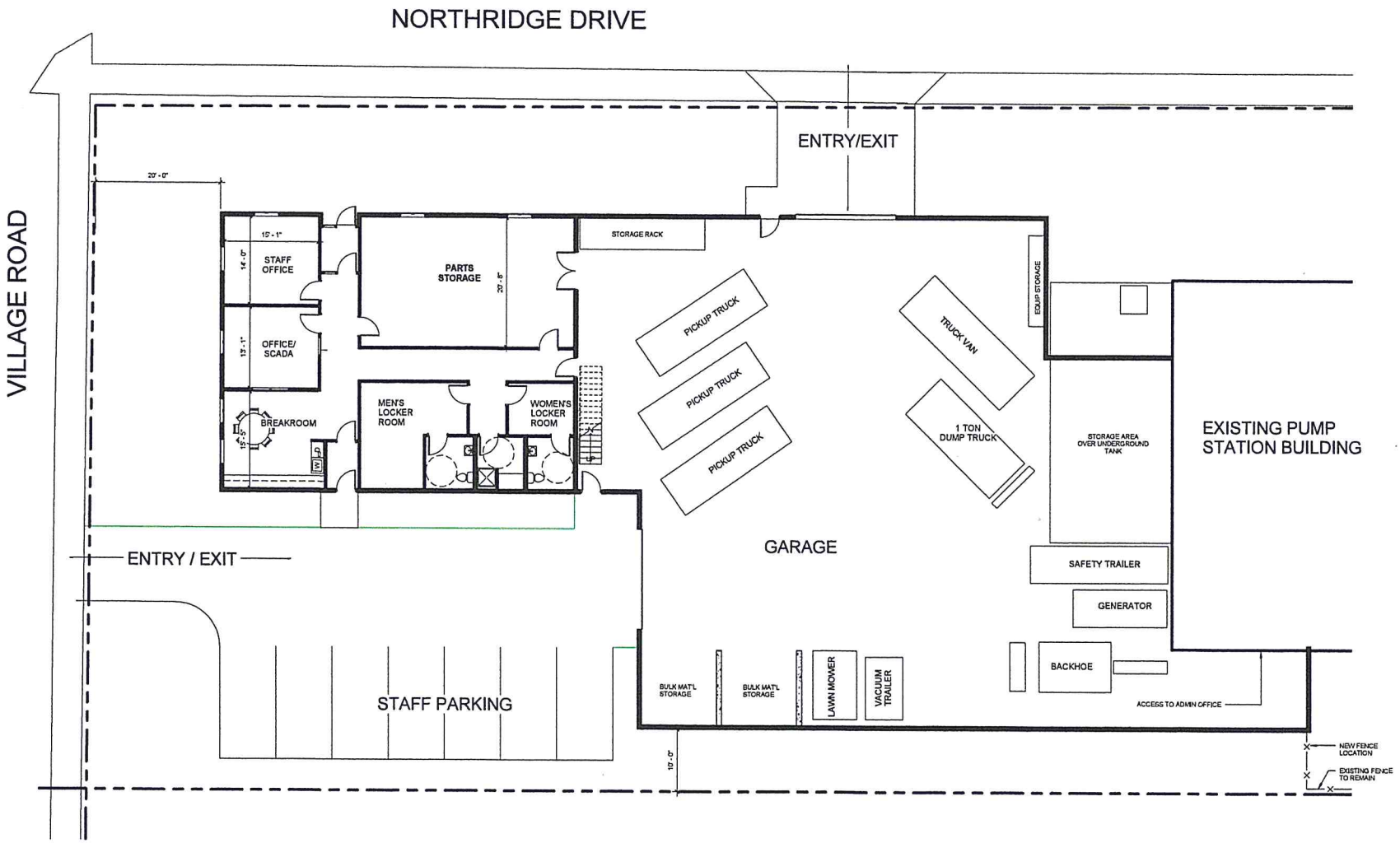

1 FLOOR PLAN - OPTION 2
1/8" = 1'-0"

TOTAL BUILDING AREA: 9,900 sq ft

REVISED OPTION - 2

PORTAGE WATER DEPT ADDITON

12/01/15

GEC
608.742.2169 | 916 Silver Lake Dr. | Portage, WI 53901
www.generalengineering.net

G:\Current Files L-Z\Portage\2015 Projects\2-0115-1G Water Dept. Maintenance Facility\CAD 2-0115-1G\1_ARCH\2-0115-1G Portage Water Dept Addition - Option 2 - Rev - 12.01.15.rvt

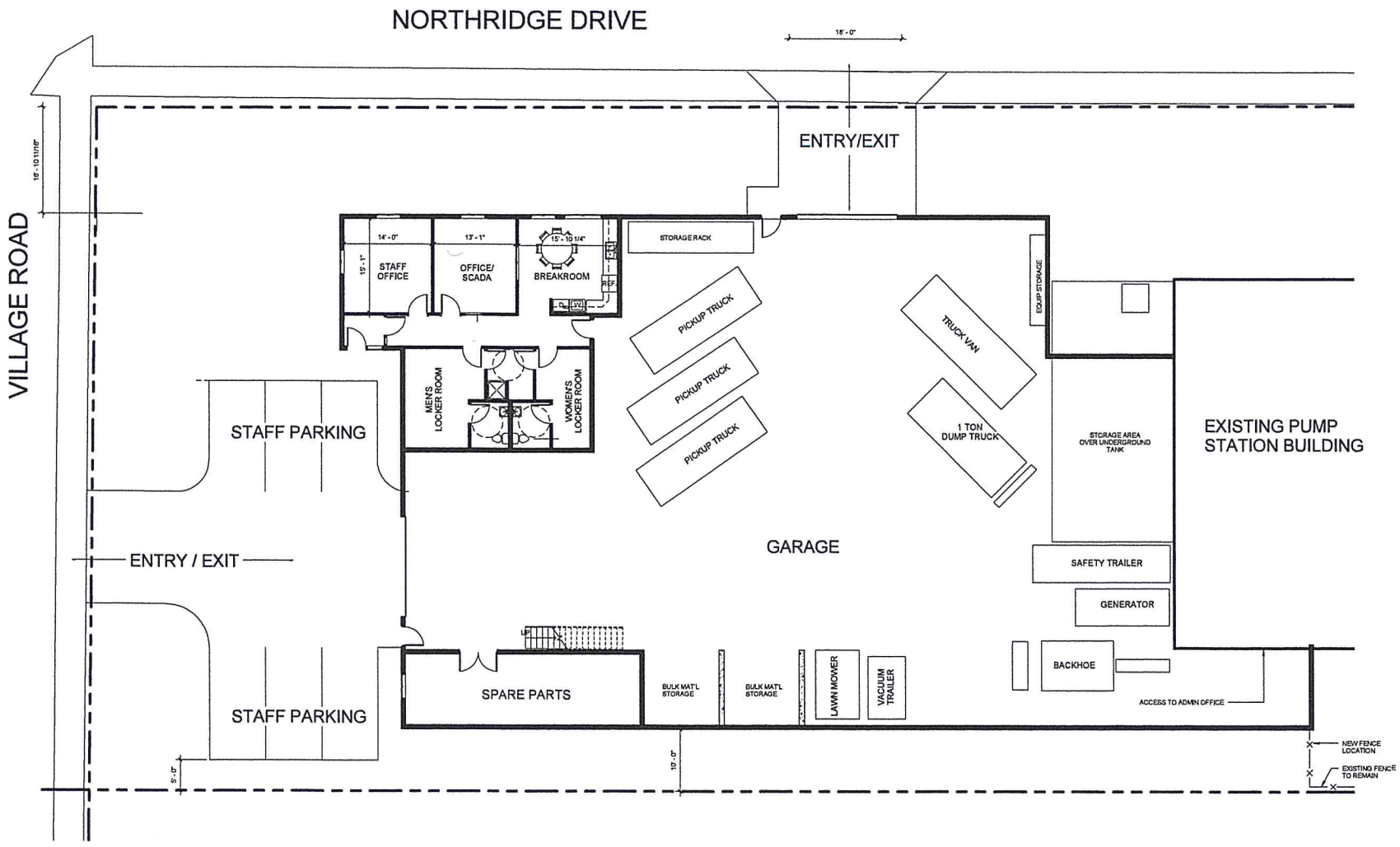

1 FLOOR PLAN - OPTION 3
1/8" = 1'-0"

TOTAL BUILDING AREA: 10,250 sq ft

REVISED OPTION - 3

PORTAGE WATER DEPT ADDITON

12/01/15

GEC
608.742.2169 | 916 Silver Lake Dr. | Portage, WI 53901
www.generalengineering.net

G:\Current Files_C-D\Portage\2015 Projects\2-0115-10 Water Dept. Maintenance Facility\CAD 2-0115-10\1_ARCH\2-0115-10 Portage Water Dept Addition - Option 3 - 12.01.15.rvt

To: Municipal Services and Utilities Committee

From: Aaron J. Jahncke, P.E., Director of Public Works/ City Engineer

Date: 12/29/15

Subject: **Rayovac Lift Station Project**

Background:

The City opened bids for the Rayovac Lift Station (LS) on December 18, 2015. The bid prices came in higher than expected. Lowest bidder was Allen Steele Co. from Lake Delton, WI. The base bid was to reconstruct the lift station in place, the main alternate was to remove the obstruction from the Airport, and the additional alternate was pump selection. Below are four bids from the lowest bidder with the alternates as described:

- Construct the LS in place with L.W. Allen/Hydromatic submersible pumps $356,000.00
- Construct the LS in place Xylem/Flygt submersible pumps $366,000.00
- Move the LS with L.W. Allen/Hydromatic submersible pumps $566,000.00
- Move the LS with Xylem/Flygt submersible pumps $576,000.00

Other issues for consideration:

- Both lift stations locations were designed with a deeper wet well to accommodate a future bar screen to remove rags and linens from the lift station. Columbia Correctional Institute (CCI) has a history of flushing towels, socks, and etc. City staff believes that CCI should pay for the additional depth or be assessed the additional cost for increasing the wet well depth. These linens clog the pumps and increase the City's O&M costs yearly. Staff has not historically logged these events but will begin detailed logs starting January 2016.
    - It is estimated that the additional wet well depth cost is approximately $25,000 - $50,000. The exact figure is yet to be determined because of the contractor's holiday schedule
    - A bar screen and a building addition to house the screen may be added in the future if the rag/linen problem still exists at an estimated cost of $120,000 - $150,000. CCI should be made aware of this future cost and possible assessment.
- The Bureau of Aeronautics (BOA) has stated in the past the FAA/BOA would contribute for the removal of the lift station because it was an obstruction to the airport. Estimated reimbursement would be approximately $150,000-$175,000. The reimbursement would have to be applied for and approved by the BOA.
- Both the L.W. Allen/Hydromatic pumps and the Xylem/Flygt pumps meet the technical standards and both are used in the City. Staff prefers the Xylem/Flygt pumps. With new pumps the tolerances in the pumps allow some rags/linens to go through and after use and wear, the pumps start to clog. Through staff's experience using both pumps it takes L.W. Allen/Hydromatic pumps about a year to start clogging whereas the Xylem/Flygt pumps usually take about three years to start regularly clogging.

Analysis:

- Option #1: Move forward with the award to move the LS with Xylem/Flygt submersible pumps $576,000.00
  - Pros
    - Removes the obstruction from the airport.
    - Gives staff time to document the rags/linen issue while still maintaining reasonable O&M costs due to frequent clogging.
  - Cons
    - Most expensive.

- Option #2 Move forward with the award to move the LS with L.W. Allen submersible pumps $566,000.00
  - Pros
    - Removes the obstruction from the airport.
    - Cost $10,000 less than option #1.
    - Provides staff time to document the rags/linen issue.
  - Cons
    - May increase short term O&M costs of the pumps.
    - Second most expensive.
- Option #3 Move forward with the award the LS in place Xylem/Flygt submersible pumps $366,000.00
  - Pros
    - A less expensive option that does not require approval from the BOA for reimbursement costs of removing the obstruction.
    - Gives staff time to document the rags/linen issue while still maintaining reasonable O&M costs due to frequent clogging.
  - Cons
    - Does not remove the obstruction from the airport.
- Option #4 Move forward with the award to move the LS with L.W. Allen submersible pumps $356,000.00
  - Pros
    - The least expensive option that does not require approval from the BOA for reimbursement costs of removing the obstruction.
    - Provides staff time to document the rags/linen issue.
  - Cons
    - May increase short term O&M costs of the pumps.
    - Does not remove the obstruction from the airport.
- Option #5 reject all bids and re-bid at a later date or next year.
  - Pros
    - Allows staff time to deal with the BOA and negotiate with CCI for reimbursement costs.
  - Cons
    - City will absorb more administrative costs to bid this out and may cost the City more money because labor and materials costs are most likely to continue to climb.

Fiscal Note:

The original budgeted amount for the lift station was $300,000 with an additional anticipated $100,000 reimbursement from the BOA/FAA for removing the obstruction from the Airport.

Recommendation:

It is staff's recommendation that the Municipal Services and Utilities Committee favorably endorse Option #1. The Municipal Services Committee will have a formal recommendation to award the project at a future meeting. Staff will reach out to CCI and continue reaching out to the BOA to work through the possible reimbursement/cost share possibilities.

Aaron J. Jahncke
Director of Public Works/ City Engineer

Attachment(s)
Rayovac Lift Station Bid Tabs
Location Maps/Plans
Email from the BOA dated 8/26/15

To Obtain Location of Participant's Underground Facilities Before You Dig in Wisconsin

CALL DIGGERS HOTLINE
1-800-242-8511

Wis Statute 182.0175 (1974)
Requires Min. 3 Work Days
Notice Before You Excavate

NOTES:

1. ALL EXISTING UNDERGROUND UTILITY LOCATIONS ARE APPROXIMATE AND SHOULD BE FIELD VERIFIED PRIOR TO CONSTRUCTION.
2. ALL GENERAL NOTES FOUND ON SHEET G1.1.

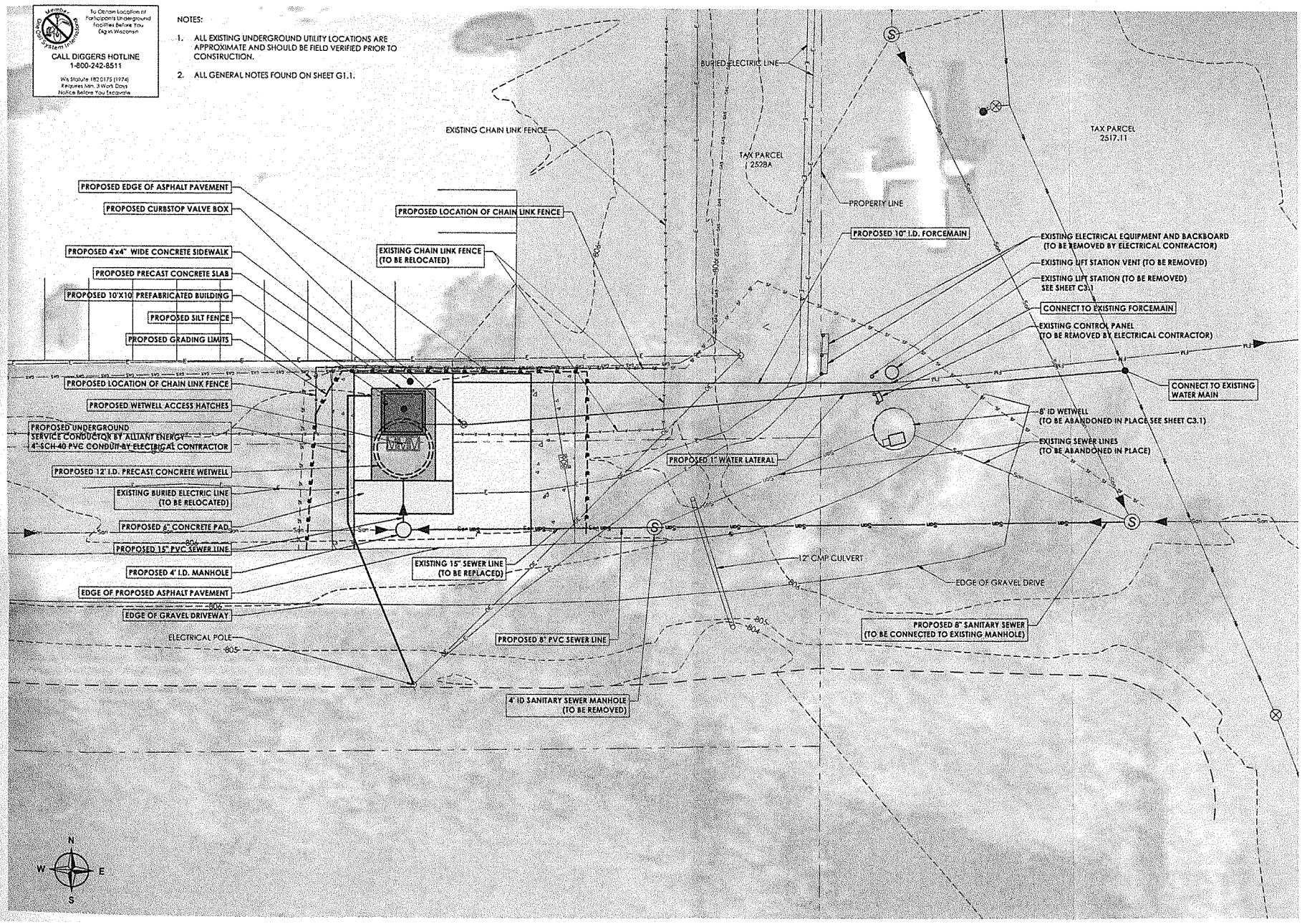

GEC

General Engineering Company

P.O. Box 340 • 916 Silver Lake Dr. • Portage, WI 53901
608-742-2169 (Office) • 608-742-2592 (Fax)
www.generalengineering.net

This document contains confidential or proprietary information of General Engineering Company. Neither this document nor the information herein is to be reproduced, distributed, used or disclosed without the express written consent of General Engineering Company.

PROPOSED SITE PLAN-ALTERNATE 1

Ray-O-Vac Lift Station Replacement

City of Portage
Columbia County, WI

REVISIONS	NO.	BY	DATE

0 20
SCALE

DRAWN BY	LAL
REVIEWED BY	JAF
ISSUE DATE	11/16/2015
GEC FILE NO	2-0115-1E
SHEET NO	C2.1

To Obtain Location of Participants Underground Facilities Before You Dig in Wisconsin

CALL DIGGERS HOTLINE
1-800-242-8511

Wis Statute 182.0175 (1974) Requires Min. 3 Work Days Notice Before You Excavate

NOTES:

1. ALL EXISTING UNDERGROUND UTILITY LOCATIONS ARE APPROXIMATE AND SHOULD BE FIELD VERIFIED PRIOR TO CONSTRUCTION.
2. ALL GENERAL NOTES FOUND ON SHEET G1.1.

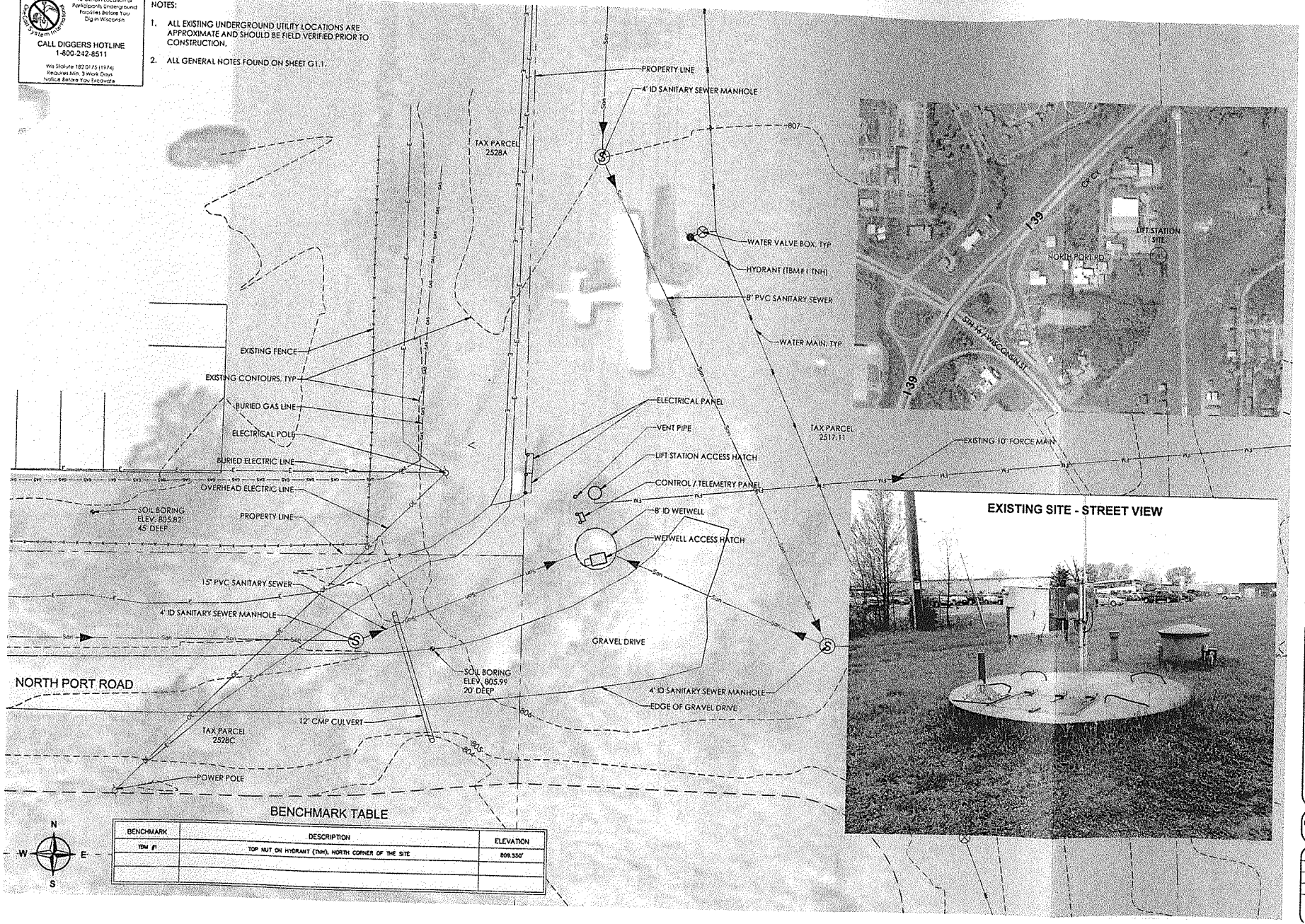

BENCHMARK TABLE

BENCHMARK	DESCRIPTION	ELEVATION
TBM #1	TOP NUT ON HYDRANT (TNH), NORTH CORNER OF THE SITE	809.550'

GEC

General Engineering Company
P.O. Box 340 • 910 Silver Lake Dr. • Portage, WI 53901
608-742-2169 (Office) • 608-742-2592 (Fax)
www.generalengineering.net

This document contains confidential or proprietary information of General Engineering Company. Neither this document nor the information herein is to be reproduced, distributed, used or disclosed, either in whole or in part, except as specifically authorized by General Engineering Company.

EXISTING SITE PLAN
Ray-O-Vac Lift Station Replacement
City of Portage

City of Portage
Columbia County, WI

REVISIONS	NO.	BY	DATE

0 20
SCALE

DRAWN BY	LAL
REVIEWED BY	JAF
ISSUE DATE	11/16/2015
GEC FILE NO	2-0115-1E
SHEET NO.	C1.0

To Obtain Location of Participants Underground Facilities Before You Dig in Wisconsin

CALL DIGGERS HOTLINE
1-800-242-8511

Wis Statute 182.0175 (1974)
Requires Min. 3 Work Days
Notice Before You Excavate

NOTES:

1. ALL EXISTING UNDERGROUND UTILITY LOCATIONS ARE APPROXIMATE AND SHOULD BE FIELD VERIFIED PRIOR TO CONSTRUCTION.
2. ALL GENERAL NOTES FOUND ON SHEET G1.1

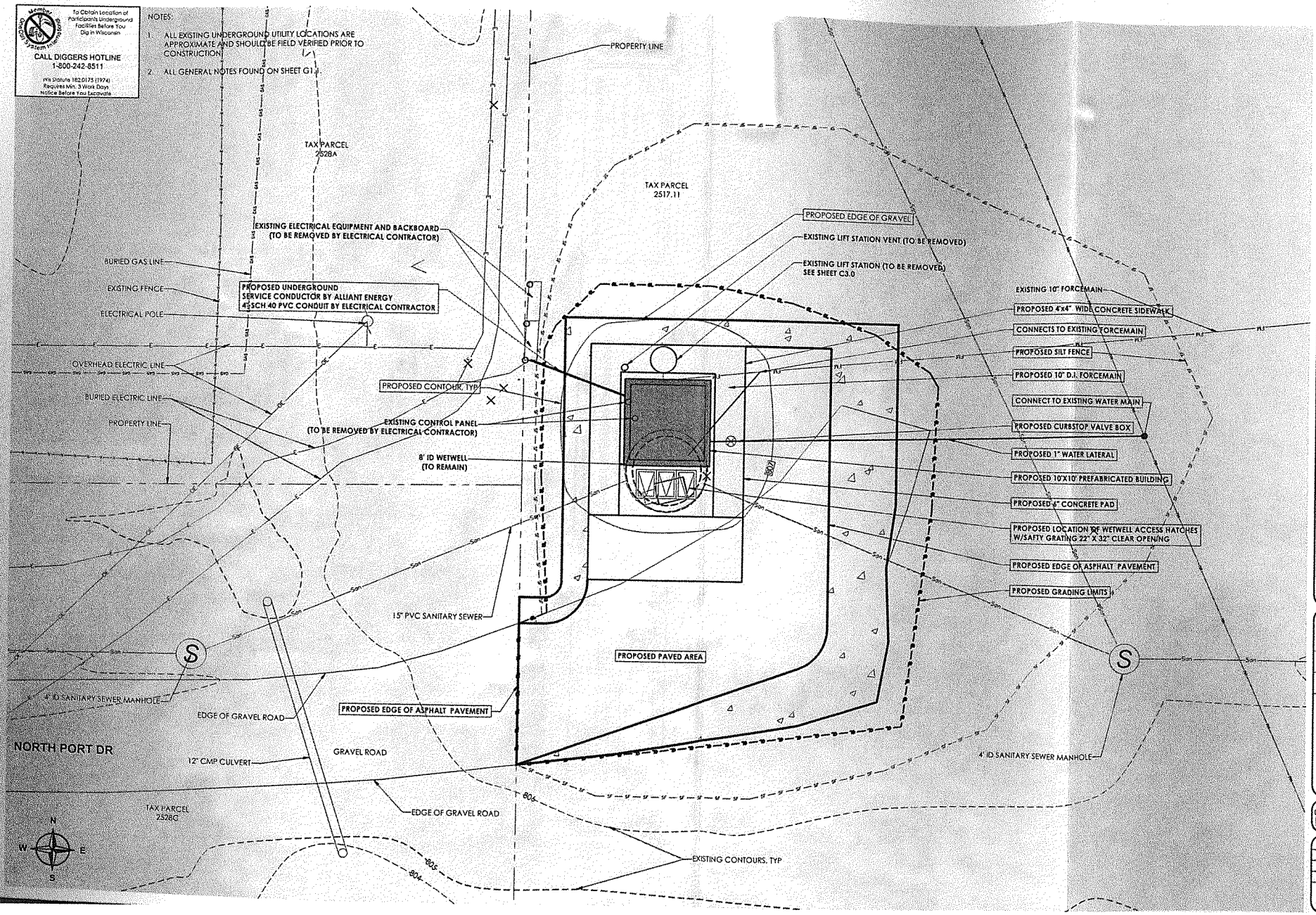

GEC

General Engineering Company
P.O. Box 340 • 918 Silver Lake Dr. • Portage, WI 53901
608-742-2169 (Office) • 608-742-2592 (Fax)
www.generalengineering.net

The Planned reports, specifications and computer software or General Engineering Company is the property of General Engineering Company and shall not be reproduced, published, used, or disclosed to others without written consent of General Engineering Company.

PROPOSED SITE PLAN - BASE BID

Ray-O-Vac - Lift Station

City of Portage

City of Portage
Columbia County, WI

REVISIONS	NO.	BY	DATE

0 10
SCALE

DRAWN BY	LAL
REVIEWED BY	JAF
ISSUE DATE	11/16/2015
GEC FILE NO.	2-0115-1E
SHEET NO.	C2.0

Aaron Jahncke

From: Bob Redelings
Sent: Wednesday, December 23, 2015 12:54 PM
To: Aaron Jahncke
Subject: FW: lift station
Attachments: 130dev.docx; 131dev.docx

FYI

Robert G. Redelings, P.E.
Public Works Director
608.742.2176, ext. 325

From: Hottenstein, Wendy - DOT [mailto:Wendy.Hottenstein@dot.wi.gov]
Sent: Wednesday, August 26, 2015 4:17 PM
To: Bob Redelings; Rita Maass; Shawn M. Murphy
Subject: lift station

I talked with Mary Strait in our office about the eligibility of the expenses related to moving the lift station. She didn't see why we couldn't consider it eligible. But the BOA would need to formally meet as an eligibility committee when the petition arrives to make a formal approval. Also we will need a "reimbursement agreement" signed by the City and BOA. Attached is a sample letter and document which we can tweak to fit the City's situation – assuming the eligibility statement for your petitioned items get approved.

So in nutshell it sounds like it is a possibility, but I can't say it is a 100% go until we get your petition package and I can get the eligibility statement formally approved for those petition items. I will also want the plan sheet showing the proposed new location and a copy of the bid documents showing the bid prices, etc. to show the proper local procurement process was followed, etc. and how much this reimbursement project will cost.

Thanks,

Wendy Hottenstein, P.E.
Airport Development Engineer - Project Manager
Bureau of Aeronautics
4802 Sheboygan Ave Rm 701
P.O. Box 7914
Madison, WI 53707-7914

Phone:608-261-6278
Fax: 608-267-6748
Email: wendy.hottenstein@dot.wi.gov

This email is on a publicly owned system, subject to open records and archival requirements under Wisconsin State Law. This email and any attachments may contain confidential information that is exempt from disclosure under applicable law. If you received this email in error, please notify the sender, delete the email and any attachments and do not use, disclose, or store the information it contains

DATE: December 18, 2015
TIME: 10:00 am
PLACE: Portage Municipal Building

TABULATION OF BIDS
RAY-O-VAC LIFT STATION REPLACEMENT PROJECT
CITY OF PORTAGE, COLUMBIA COUNTY, WI

GENERAL ENGINEERING CO.
P.O. Box 340, 916 Silver Lake Dr.
Portage, WI 53901

	CONTRACTOR:			Allen Steele Co., Inc. PO Box 430 Lake Delton, WI 53940		Capitol Underground 782 Lois Dr. Sun Prairie, WI 53590		Super Excavators, Inc. N59 W14601 Bobolink Ave. Menomonee Falls, WI 53051
	Addendum 1:			X		X		X
	Addendum 2:			X		X		X
	Bid Bond:			X		X		X
	Certified Check:							
No.	Description	Qty.	Unit	Unit Price	Amount	Unit Price	Amount	Unit Price	Amount
1	Contract No. 15-620S08								
	Base Bid Item No. 1 - Ray-O-Vac Lift Station								
	To furnish all materials, labor, tools, and equipment necessary to replace the existing steel-can dry pit lift station with a triplex submersible station in accordance with the Drawings and Specifications including, but not limited by enumeration to: abandonment of buried steel lift station and electric pwoer feed, bypass pumping, topsoil stripping, excavation and fill material, removal of wetwell concrete fillet, preparing wetwell for pumping equipment, concrete footings, precast concrete top with access hatches, prefabricated control building, submersible pumps with guiderail system, piping and valves, transducer and floats, reconnection to forcemain, pump control center, electric service, VFDs, control and power wiring, relocating SCADA control panel & anntenna, truck mounted bumper crane, 1" water service line, paved driveway, concrete walkway, concrete access pad, seeding/mulch and erosion control for the Lump sum of				$ 330,000.00		$ 345,000.00		$ 530,000.00
	Alternate Bid Item No. 1 - Ray-O-Vac Lift Station								
	To furnish all materials, labor, tools, and equipment necessary to replace the existing steel-can dry pit lift station with a triplex submersible station in accordance with the Drawings and Specifications including, but not limited by enumeration to: abandonment of buried steel lift station and electric power feed, bypass pumping, topsoil stripping, excavation and fill material, construction of sewer lines, forcemain construction, new 12' wetwell construction, utility relocation, chain link fence relocation, concrete footings, precast concrete top with access hatches, prefabricated control building, submersible pumps with guiderail system, piping and valves, transducer and floats, reconnection to forcemain, pump control center, electric service, VFDs, control and power wiring, relocating SCADA control panel & antenna, truck mounted bumper crane, 1" water service line, paved driveway, concrete walkway, concrete access pad, seeding/mulch and erosion control for the Lump sum of				$ 540,000.00		$ 645,000.00		$ 1,155,000.00
	Bid Item No. 1 - Deep Lift Device Allowance								
	An allowance for purchase/installation of a deep lift device. The purchase of the device shall be coordinated with the City/Treatment Plant Superintendent	1	LS	$ 10,000.00	$ 10,000.00	$ 10,000.00	$ 10,000.00	$ 10,000.00	$ 10,000.00
	Bid Item No. 2 - Truck Bumper Mounted Crane Allowance								
	An allowance for purchase/installation of a truck bumper mounted crane for a City owned truck. Purchase of device shall be coordinated with the City/Treatment Plan Superintendent	1	LS	$ 10,000.00	$ 10,000.00	$ 10,000.00	$ 10,000.00	$ 10,000.00	$ 10,000.00
	Bid Item No. 3 - SCADA Allowance								
	An allowance for re-connecting thte relocated SCADA RTU panel, and SCADA programming for new pump controls. This work will be performed by the SCADA system integrator for the City of Portage.	1	LS	$ 6,000.00	$ 6,000.00	$ 6,000.00	$ 6,000.00	$ 6,000.00	$ 6,000.00
	TOTAL BASE BID CONTRACT 1 AMOUNT:				**$ 356,000.00**		**$ 371,000.00**		**$ 556,000.00**
	Xylem/Flygt	1	LS		$ 140,000.00				
	L.W. Allen/Hydromatic	1	LS		$ 130,000.00		$ 121,000.00		$ 120,410.00
	B&M Tech/ShinMaywa	1	LS		$ 165,000.00				
	Other	1	LS						
	TOTAL ALTERNATE 1 CONTRACT AMOUNT :				**$ 566,000.00**		**$ 671,000.00**		**$ 1,181,000.00**
	Xylem/Flygt	1	LS		$ 140,000.00				
	L.W. Allen/Hydromatic	1	LS		$ 130,000.00		$ 121,000.00		$ 120,410.00
	B&M Tech/ShinMaywa	1	LS		$ 165,000.00				
	Other	1	LS						
	BID RESULTS:				1		2		3

DATE: December 18, 2015
TIME: 10:00 am
PLACE: Portage Municipal Building

TABULATION OF BIDS
RAY-O-VAC LIFT STATION REPLACEMENT PROJECT
CITY OF PORTAGE, COLUMBIA COUNTY, WI

GENERAL ENGINEERING CO.
P.O. Box 340, 916 Silver Lake Dr.
Portage, WI 53901

	CONTRACTOR:			Woleske Contractors 536 Antelope Trail Green Bay, WI 54313					
	Addendum 1:			X					
	Addendum 2:			X					
	Bid Bond:			X					
	Certified Check:								
No.	**Description**	**Qty.**	**Unit**	**Unit Price**	**Amount**	**Unit Price**	**Amount**	**Unit Price**	**Amount**
1	**Contract No. 15-620S08**								
	Base Bid Item No. 1 - Ray-O-Vac Lift Station								
	To furnish all materials, labor, tools, and equipment necessary to replace the existing steel-can dry pit lift station with a triplex submersible station in accordance with the Drawings and Specifications including, but not limited by enumeration to: abandonment of buried steel lift station and electric pwoer feed, bypass pumping, topsoil stripping, excavation and fill material, removal of wetwell concrete fillet, preparing wetwell for pumping equipment, concrete footings, precast concrete top with access hatches, prefabricated control building, submersible pumps with guiderail system, piping and valves, transducer and floats, reconnection to forcemain, pump control center, electric service, VFDs, control and power wiring, relocating SCADA control panel & anntenna, truck mounted bumper crane, 1" water service line, paved driveway, concrete walkway, concrete access pad, seeding/mulch and erosion control for the Lump sum of				$ 544,444.00				
	Alternate Bid Item No. 1 - Ray-O-Vac Lift Station								
	To furnish all materials, labor, tools, and equipment necessary to replace the existing steel-can dry pit lift station with a triplex submersible station in accordance with the Drawings and Specifications including, but not limited by enumeration to: abandonment of buried steel lift station and electric power feed, bypass pumping, topsoil stripping, excavation and fill material, construction of sewer lines, forcemain construction, new 12' wetwell construction, utility relocation, chain link fence relocation, concrete footings, precast concrete top with access hatches, prefabricated control building, submersible pumps with guiderail system, piping and valves, transducer and floats, reconnection to forcemain, pump control center, electric service, VFDs, control and power wiring, relocating SCADA control panel & antenna, truck mounted bumper crane, 1" water service line, paved driveway, concrete walkway, concrete access pad, seeding/mulch and erosion control for the Lump sum of				$ 721,000.00				
	Bid Item No. 1 - Deep Lift Device Allowance								
	An allowance for purchase/installation of a deep lift device. The purchase of the device shall be coordinated with the City/Treatment Plant Superintendent	1	LS	$ 10,000.00	$ 10,000.00	$ 10,000.00	$ 10,000.00	$ 10,000.00	$ 10,000.00
	Bid Item No. 2 - Truck Bumper Mounted Crane Allowance								
	An allowance for purchase/installation of a truck bumper mounted crane for a City owned truck. Purchase of device shall be coordinated with the City/Treatment Plan Superintendent	1	LS	$ 10,000.00	$ 10,000.00	$ 10,000.00	$ 10,000.00	$ 10,000.00	$ 10,000.00
	Bid Item No. 3 - SCADA Allowance								
	An allowance for re-connecting thte relocated SCADA RTU panel, and SCADA programming for new pump controls. This work will be performed by the SCADA system integrator for the City of Portage.	1	LS	$ 6,000.00	$ 6,000.00	$ 6,000.00	$ 6,000.00	$ 6,000.00	$ 6,000.00
	TOTAL BASE BID CONTRACT 1 AMOUNT:				**$ 570,444.00**				
	Xylem/Flygt	1	LS		$ 130,000.00				
	L.W. Allen/Hydromatic	1	LS						
	B&M Tech/ShinMaywa	1	LS						
	Other	1	LS						
	TOTAL ALTERNATE 1 CONTRACT AMOUNT :				**$ 747,000.00**				
	Xylem/Flygt	1	LS		$ 130,000.00				
	L.W. Allen/Hydromatic	1	LS						
	B&M Tech/ShinMaywa	1	LS						
	Other	1	LS						
	BID RESULTS:			4					

To: Municipal Services and Utilities Committee

From: Aaron J. Jahncke, P.E., Director of Public Works/ City Engineer

Date: 12/29/15

Subject: **River St. Reconstruction Update**

Background:
The City is entering the final design phase for the River St. reconstruction project. River St. reconstruction project consists of four projects that will be bid as one. On River St. from W. Wisconsin St. to Summit will be a complete reconstruction that will include new storm sewer, sanitary sewer, water main, street, new sidewalk where none exists, and replacement of existing sidewalk panels. On River St. from Summit St. to Cemetery St. the project will consist of asphalt resurfacing project, addition of curb and gutter, and sidewalk. To accommodate portions of sidewalk a retaining wall will be installed where elevations do not match. On Sanborn St. from River St. to W. Franklin St the project will consist of sidewalk and asphalt resurfacing. Finally, on W. Wisconsin St. from Summit to River St. we will be replacing sidewalk slabs.

Originally the project was to include the addition of sidewalk on Summit St. from River St. to W. Wisconsin. It was determined that the right of way was not wide enough to accommodate new sidewalk. The project is now scheduled for 2018 and will be completed in conjunction with the W. Carroll St. Project. In 2016 and 2017 the City will acquire the necessary right of way in order to install the new sidewalk.

Analysis:

Below is the tentative schedule:

Friday, January 8th	Bid Ad to City
Thursday, January 28th	Bid Opening at City Hall
Thursday, February 4th	Municipal Services Committee Mtg
Thursday, February 11th	City Council Award

Fiscal Note:
There is no immediate fiscal impact, the Municipal Services and Utilities Committee and the City Council will ultimately have to approve the final contract amount with the award of the project later this year.

Recommendation:
No recommendation is needed.

Aaron J. Jahncke
Director of Public Works/ City Engineer

Attachment(s)
Plan Set

PRELIMINARY NOT FOR CONSTRUCTION

2016 STREET & UTILITY IMPROVEMENTS
RIVER STREET

City of Portage
Columbia County, WI
2016

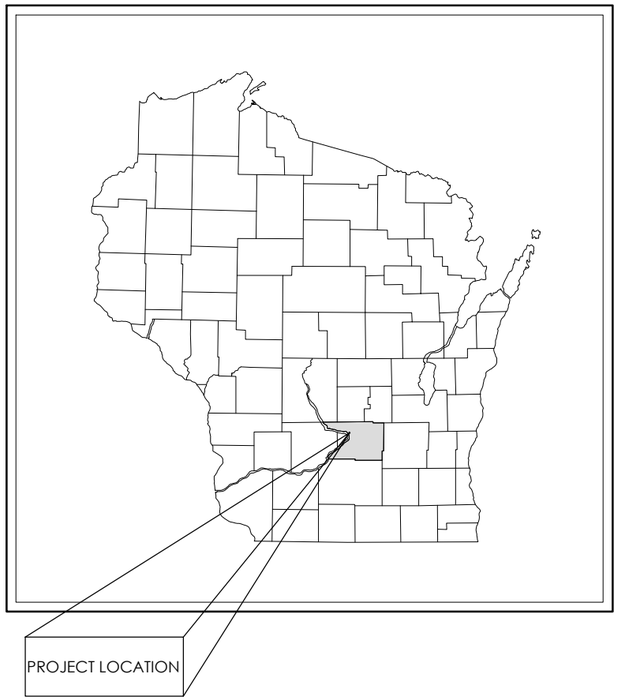

N

NO SCALE

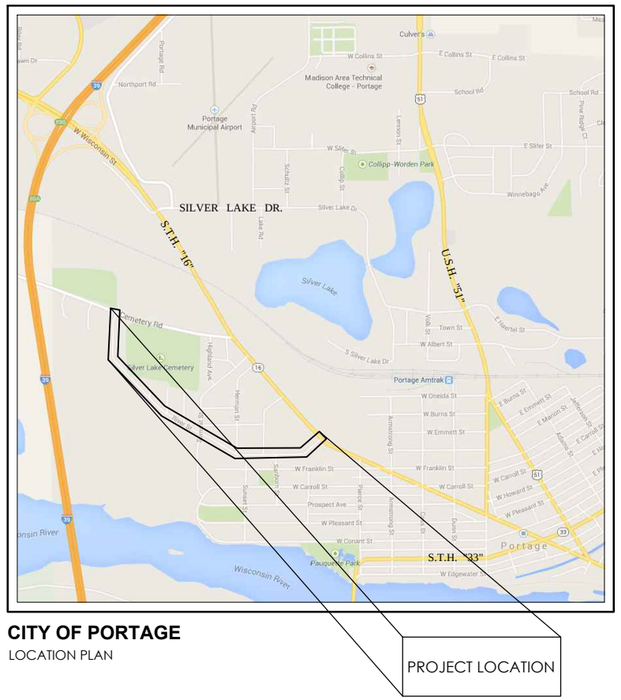

CITY OF PORTAGE
LOCATION PLAN

TABLE OF CONTENTS:

GENERAL

G1.0	TITLE PAGE
G1.1	LEGEND & NOTES

CIVIL

C1.0	PROJECT OVERVIEW
C2.0 - C2.9	UTILITIES PLAN & PROFILES
C3.0	STORM SEWER PLAN
C4.0	CROSS SECTIONS
C5.0	EROSION CONTROL DETAILS
C6.0 - C6.1	STORM SEWER CONSTRUCTION DETAILS
C7.0	SANITARY SEWER CONSTRUCTION DETAILS
C8.0	WATER MAIN CONSTRUCTION DETAILS
C9.0	MISC. PROJECT DETAILS

ENGINEER SEAL:

General Engineering Company
P.O. Box 340 • 916 Silver Lake Dr. • Portage, WI 53901
608-742-2169 (Office) • 608-742-2592 (Fax)
www.generalengineering.net

This documes contains confidential or proprietary information of General Engineering Company. Neither this document nor the information herein may be reproduced or disclosed, under any circumstances, either in whole or in part except as specifically authorized by General Engineering Company.

TITLE PAGE
2016 Street & Utility Improvements
City of Portage

City of Portage
Columbia County, WI

REVISIONS	NO.	BY	DATE

0
SCALE

DRAWN BY	BRU
REVIEWED BY	KDA
ISSUE DATE	Dec. 30, 2015
GEC FILE NO.	2-0115-1F
SHEET NO.	G1.0

G:\Current Files L-Q\Portage\2015 Projects\2-0115-1F 2016 Utility Reconstruction Project\CAD 2-0115-1F\2_CIVIL\Production Drawings\0-TP-2-0115-1F.dwg, 12/29/2015 4:28:39 PM

PRELIMINARY NOT FOR CONSTRUCTION

CONSTRUCTION NOTES

GENERAL

1. ALL EXISTING UNDERGROUND UTILITY LOCATIONS SHOWN ARE APPROXIMATE AND SHOULD BE FIELD VERIFIED, BY CONTRACTOR, PRIOR TO CONSTRUCTION.
2. EXISTING DRIVEWAYS ARE DESIGNATED IN THE FOLLOWING MANNER:
   A -- ASPHALT
   G -- GRAVEL
   C -- CONCRETE
   D -- DIRT
3. SOUTH SIDE OF RIVER STREET WHERE NO EXISTING OR PROPOSED SIDEWALK. PROPOSED DRIVEWAY APPROACH TO BE REPLACED IN-KIND UNLESS EXISTING APPROACH IS DIRT OR GRAVEL; IN WHICH CASE, AN ASPHALT APPROACH IS TO BE USED.
4. ALL EXISTING ASPHALT AND GRAVEL DRIVEWAY APRONS THAT ARE REQUIRED TO BE RECONSTRUCTED SHALL BE REPLACED WITH 6" OF CRUSHED AGGREGATE BASE COURSE AND 2" OF ASPHALT. ALL EXISTING CONCRETE DRIVEWAY APRONS THAT ARE REQUIRED TO BE RECONSTRUCTED SHALL BE REPLACED WITH 4" OF CRUSHED AGGREGATE BASE COURSE AND 6" CONCRETE.
5. THE CONTRACTOR SHALL PROVIDE A MINIMUM OF 48 HOURS NOTICE TO ALL AFFECTED RESIDENTS FOR ALL PLANNED WATER AND/OR SEWER SERVICE OUTAGES.
6. ALL ASPHALT REPAIRS/REPLACEMENT SHALL BE SAWCUT TO MATCH EXISTING PAVEMENT AS SHOWN ON THE PLANS OR AS DIRECTED BY THE ENGINEER.

WATER MAIN

1. EXISTING WATER MAIN LOCATIONS, SIZES, AND TYPES SHOULD BE FIELD VERIFIED BY THE CONTRACTOR PRIOR TO MAKING ANY CONNECTIONS.
2. UNLESS OTHERWISE INDICATED BY DESIGN GRADE, MAINTAIN A 7.0' MINIMUM DEPTH OF COVER OVER PROPOSED WATER MAIN AND WATER MAIN LATERALS.
3. UNLESS OTHERWISE INDICATED FOR WATER MAIN CROSSINGS BELOW STORM SEWER & SANITARY SEWER PIPES CONTRACTOR SHALL MAINTAIN A MINIMUM 18" OF SEPARATION FROM EDGE OF PIPE TO EDGE OF PIPE.
4. LATERALS SHALL BE 1" COPPER UNLESS OTHERWISE INDICATED.
5. REPLACE ALL WATER LATERALS FROM THE ROW LINE TO THE NEW WATER MAIN. CURB STOPS TO BE REMOVED AND REPLACED AT THE ROW LINE.

SANITARY SEWER & FORCEMAIN

1. EXISTING SANITARY SEWER LOCATIONS, SIZES, AND TYPES SHOULD BE FIELD VERIFIED BY THE CONTRACTOR PRIOR TO MAKING ANY CONNECTIONS.
2. NOT ALL SEWER LATERALS ARE SHOWN. ALL PARCELS TO HAVE SANITARY SEWER SERVICE LATERAL REPLACED EVEN IF NOT SHOWN. CONTRACTOR SHALL FIELD VERIFY LOCATIONS OF ALL SANITARY SEWER SERVICE LATERALS.
3. REPLACE SEWER LATERALS FROM RIGHT OF WAY TO NEW SANITARY MAIN AND INSTALL A TRACER WIRE TERMINAL BOX AT THE STREET RIGHT-OF-WAY.
4. LATERALS SHALL BE 6" PVC UNLESS OTHERWISE INDICATED.
5. SANITARY SEWER PIPE LENGTHS ARE SHOWN MEASURED FROM INSIDE OF STRUCTURE TO INSIDE OF STRUCTURE.
6. ALL LATERAL CONNECTIONS TO NEW MAIN SHALL BE MADE WITH WYE CONNECTIONS.

STORM SEWER

1. STORM SEWER PIPE LENGTHS ARE SHOWN MEASURED FROM INSIDE OF STRUCTURE TO INSIDE OF STRUCTURE.

GRADING & EROSION CONTROL NOTES

1. ALL EROSION CONTROL MEASURES SHALL BE IN PLACE PRIOR TO CONSTRUCTION.
2. ROCK CONSTRUCTION ENTRANCE AND INLET PROTECTION SHALL BE INSTALLED PRIOR TO ANY LAND DISTURBING ACTIVITIES.
3. ALL STORM SEWER INLETS SHALL HAVE INLET PROTECTION TYPE-D INSTALLED UPON INLET INSTALLATION.
4. CONTRACTOR IS RESPONSIBLE FOR WEEKLY DNR INSPECTION REPORTS IN ACCORDANCE WITH NR 216.46(9).
5. ADDITIONAL EROSION CONTROL MEASURES MAY BE ADDED ON AN AS-NEEDED BASIS.
6. ANY AREAS WHERE GRADING IS COMPLETE SHALL BE STABILIZED WITH FERTILIZER, SEED, & MULCH AS SOON AS POSSIBLE.
7. ALL BEST MANAGEMENT PRACTICES WILL BE INSTALLED BY THE TIME THE CONSTRUCTION SITE IS CONSIDERED STABILIZED.
8. A COPY OF THIS EROSION CONTROL PLAN SHALL BE KEPT ON SITE THROUGHOUT THE DURATION OF THE PROJECT.
9. STOCKPILES LEFT INACTIVE FOR 7 DAYS SHALL BE SEEDED AND SURROUNDED BY SILT FENCE.
10. ALL WASTE AND UNUSED BUILDING MATERIALS (INCLUDING GARBAGE, DEBRIS, CLEANING WASTES, OR OTHER CONSTRUCTION MATERIALS) SHALL BE PROPERLY DISPOSED OF AND NOT ALLOWED TO BE CARRIED BY RUNOFF INTO RECEIVING CHANNEL.
11. ALL DEWATERING PERMITTING, IF REQUIRED, IS THE RESPONSIBILITY OF THE CONTRACTOR AND SHALL BE IN ACCORDANCE WITH DNR TECHNICAL STANDARD 1061.
12. STREETS SHALL BE SWEPT AT THE END OF EACH WORK DAY OR AS DIRECTED BY THE MUNICIPALITY.
13. TRACKING PADS SHALL BE USED AT THE CONSTRUCTION ENTRANCE AND EXITS.
14. ALTHOUGH ROCK CONSTRUCTION TRACKING PADS MAY NOT BE SHOWN ON THE PLANS, THE CONTRACTOR SHALL INSTALL THEM AS NECESSARY OR AS DIRECTED BY THE ENGINEER TO MINIMIZE TRACKING ONTO ADJACENT STREETS. THESE PADS ARE CONSIDERED INCIDENTAL TO THE WORK AND WILL NOT BE MEASURED OR PAID FOR SEPARATELY.
15. CONTRACTOR WILL BE RESPONSIBLE FOR ALL DUST CONTROL.
16. ALL BANK AREAS DISTURBED SHALL BE STABILIZED WITH EROSION CONTROL MAT IMMEDIATELY.
17. SEDIMENT SHALL BE REMOVED FROM BEHIND SEDIMENT FENCES AND BARRIERS BEFORE IT REACHES A DEPTH THAT IS EQUAL TO HALF THE BARRIER'S HEIGHT.
18. BREAKS AND GAPS IN SEDIMENT FENCES AND BARRIERS SHALL BE REPAIRED IMMEDIATELY. DECOMPOSING STRAW BALES WILL BE REPLACED (TYPICAL BALE LIFE IS THREE MONTHS).
19. ALL SEDIMENT THAT MOVES OFF-SITE DUE TO CONSTRUCTION ACTIVITY OR STORM EVENTS SHALL BE CLEANED UP BEFORE THE END OF THE SAME WORKDAY.
20. ALL INSTALLED EROSION CONTROL PRACTICES SHALL BE MAINTAINED UNTIL THE DISTURBED AREAS THEY PROTECT ARE STABILIZED.

EXISTING LINETYPES LEGEND

San	SANITARY SEWER
ST	STORM SEWER
WM	WATER MAIN
FM	FORCE MAIN
E	ELECTRIC
OE	OVERHEAD ELECTRIC
G	GAS
FO	FIBER OPTIC
T	TELEPHONE
TV	TV
x x x x	FENCE
	GUARD RAIL
GL GL GL	GRADING LIMITS
SF SF SF	SILT FENCE
DB DB DB	DOUBLE SEDIMENT BARRIER
	TRAIN TRACKS
	TREELINE

SYMBOLS LEGEND

- EXISTING MANHOLE
- PROPOSED MANHOLE
- EXISTING HYDRANT
- PROPOSED HYDRANT
- VALVE
- CURB STOP
- TRACER WIRE TERMINAL BOX
- WELL
- PROPERTY CORNER
- LIGHT POLE
- POWER / TELEPHONE POLE
- GUY WIRE
- UTILITY PEDESTAL
- SIGN
- SOIL BORING
- MONITORING WELL
- MAILBOX
- CAUTION — POTENTIAL HAZARD
- BENCHMARK
- GEC-CP # — CONTROL POINT
- DECIDUOUS TREE
- CONIFEROUS TREE
- HANDICAP SYMBOL

ABBREVIATION LIST

B-B = BACK TO BACK
BOC = BACK OF CURB
BOP = BOTTOM OF PIPE
BOW = BOTTOM OF WALL
C-C = CENTER TO CENTER
CL = CENTERLINE
CP = CONTROL POINT
DIA = DIAMETER
ELEV = ELEVATION
EOG = EDGE OF GRAVEL
EOP = EDGE OF PAVEMENT
EX = EXISTING
FL = FLOW LINE
FM = FORCE MAIN
HC = HORIZONTAL CURVE
HP = HIGH POINT
IE = INVERT ELEVATION
INL = INLET
INV = INVERT
IOS = INSIDE OF STRUCTURE
L = LENGTH
LN = LINE
LP = LOW POINT
MH = MANHOLE
MIN = MINIMUM
MP = MIDPOINT
PC = POINT OF CURVE
PI = POINT OF INTERSECTION
PRO = PROPOSED
PT = POINT OF TANGENT
PVC = POINT OF VERTICAL CURVE
PVI = POINT OF VERTICAL INTERSECTION
PVMT = PAVEMENT
PVT = POINT OF VERTICAL TANGENT
R = RADIUS
ROW = RIGHT OF WAY
S = SANITARY SEWER SERVICE LATERAL
SAN = SANITARY SEWER
SE = SPOT ELEVATION
ST = STORM SEWER
STA = STATION
STD = STANDARD
TC = TOP OF CURB
TOP = TOP OF PIPE
TOW = TOP OF WALL
TYP = TYPICAL
UOS = UNLESS OTHERWISE SPECIFIED
VC = VERTICAL CURVE
W = WATER MAIN SERVICE LATERAL
WM = WATER MAIN

DIGGERS HOTLINE NOTE

Member Wisconsin Utility Locating System Intermediate

To Obtain Location of Participants Underground Facilities Before You Dig in Wisconsin

CALL DIGGERS HOTLINE
1-800-242-8511

Wis Statute 182.0175 (1974)
Requires Min. 3 Work Days
Notice Before You Excavate

OWNER

CITY OF PORTAGE
115 WEST PLEASANT ST.
PORTAGE, WI 53901
PHONE: (608) 742-2176

UTILITIES

1. **ELECTRIC**
   ALLIANT ENERGY
   2777 COLUMBIA DRIVE
   PORTAGE, WI 53901
   PHONE: (608) 742-0836
   CONTACT: STEVE KOHLHAGEN
   MATT JOHNSON
2. **TELEPHONE**
   FRONTIER
   2222 WEST WISCONSIN ST.
   PORTAGE, WI 53901
   PHONE: (608) 742-9507
   CONTACT: JERRY MOORE
3. **GAS**
   ALLIANT ENERGY
   2777 COLUMBIA DRIVE
   PORTAGE, WI 53901
   PHONE: (608) 742-0836
   CONTACT: STEVE KOHLHAGEN
4. **CABLE TV**
   CHARTER COMMUNICATIONS
   E17401 STATE HWY 33
   BARABOO, WI 53913
   PHONE: (608) 235-1911
   CONTACT: HARLOW JARVIS
5. **WATER**
   CITY OF PORTAGE WATER DEPT.
   135 NORTHRIDGE DR.
   PORTAGE, WI 53901
   PHONE: (608) 742-4727
6. **MUNICIPALITY**
   CITY OF PORTAGE
   115 WEST PLEASANT ST.
   PORTAGE, WI 53901
   PHONE: (608) 742-2176

GEC
General Engineering Company
P.O. Box 340 • 916 Silver Lake Dr. • Portage, WI 53901
608-742-2169 (Office) • 608-742-2592 (Fax)
www.generalengineering.net

This document contains confidential or proprietary information of General Engineering Company. Neither this document nor the information contained herein is to be used, reproduced or disclosed either in whole or in part except as specifically authorized by General Engineering Company.

LEGEND & NOTES
2016 Street & Utility Improvements
City of Portage

City of Portage
Columbia County, WI

NO.	BY	DATE	REVISIONS

0
SCALE

DRAWN BY	BRU
REVIEWED BY	KDA
ISSUE DATE	Dec. 30, 2015
GEC FILE NO.	2-0115-1F
SHEET NO.	G1.1

G:\Current Files L-Q\Portage\2015 Projects\2-0115-1F 2016 Utility Reconstruction Project\CAD 2-0115-1F\2_CIVIL\Production Drawings\1-LN-2-0115-1F.dwg, 12/29/2015 4:30:07 PM

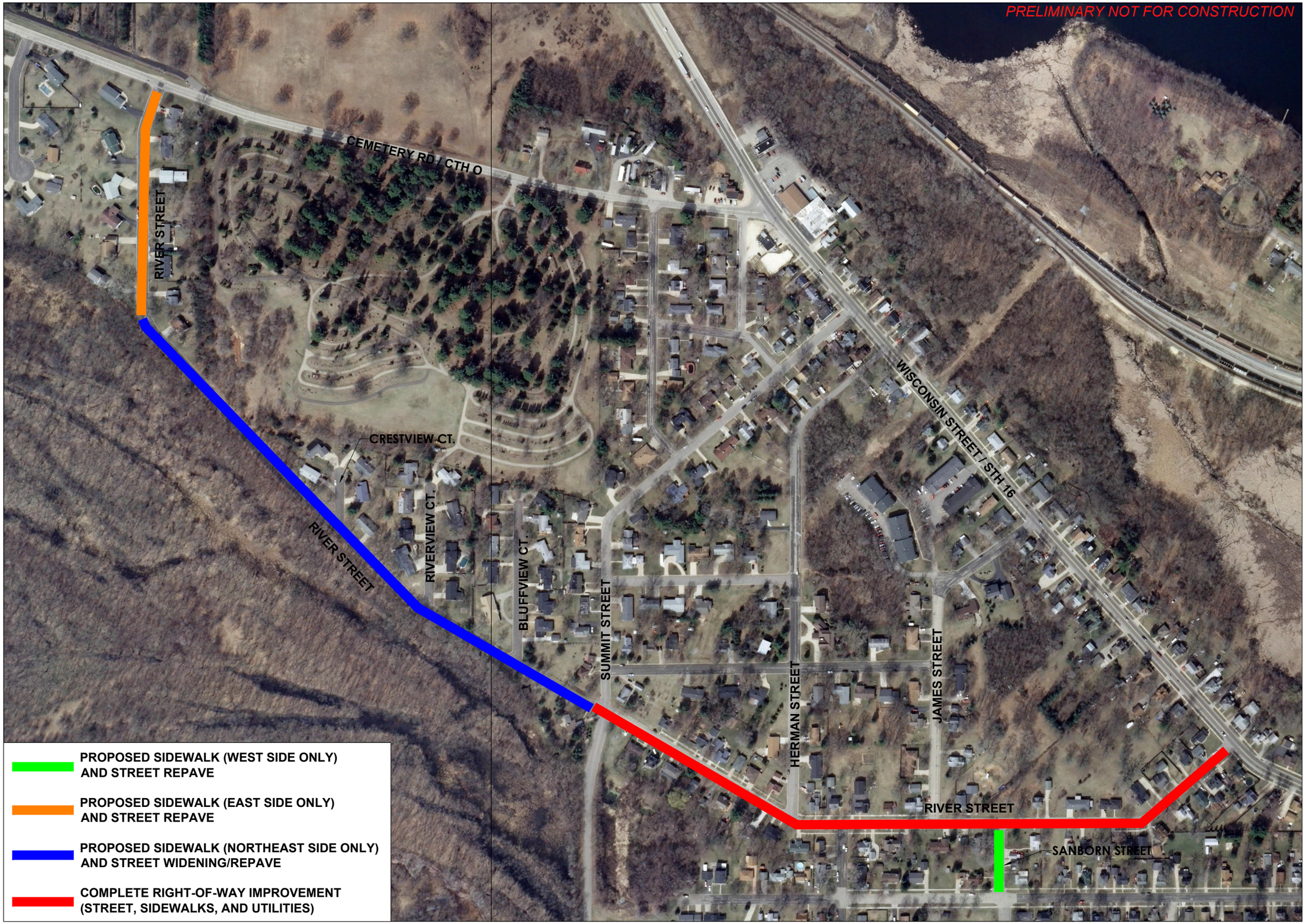

GEC

General Engineering Company

P.O. Box 340 • 916 Silver Lake Dr. • Portage, WI 53901
608-742-2169 (Office) • 608-742-2592 (Fax)
www.generalengineering.net

This document contains confidential or proprietary information of General Engineering Company. Neither possession nor receipt of this document by any person or entity confers any right to copy, distribute or disclose it in whole or in part except as specifically authorized by General Engineering Company.

PROJECT OVERVIEW

2016 Street & Utility Improvements
City of Portage

City of Portage
Columbia County, WI

REVISIONS	NO.	BY	DATE

N
W E
S
0 300
SCALE

DRAWN BY	BRU
REVIEWED BY	KDA
ISSUE DATE	Dec. 30, 2015
GEC FILE NO.	2-0115-1F
SHEET NO.	C1.0

G:\Current Files L-Q\Portage\2015 Projects\2-0115-1F 2016 Utility Reconstruction Project\CAD 2-0115-1F\2_CIVIL\Production Drawings\SP-2-0115-1F-Overview.dwg, 12/29/2015 4:33:38 PM

PRELIMINARY NOT FOR CONSTRUCTION

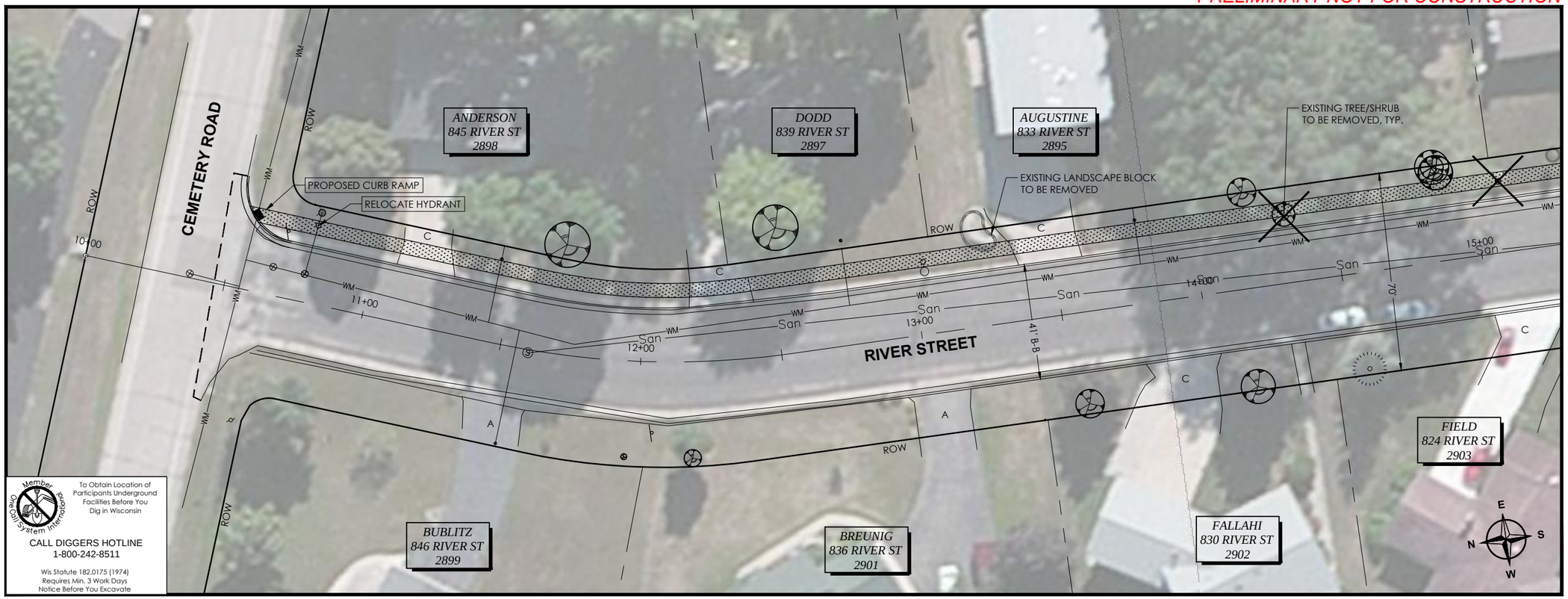

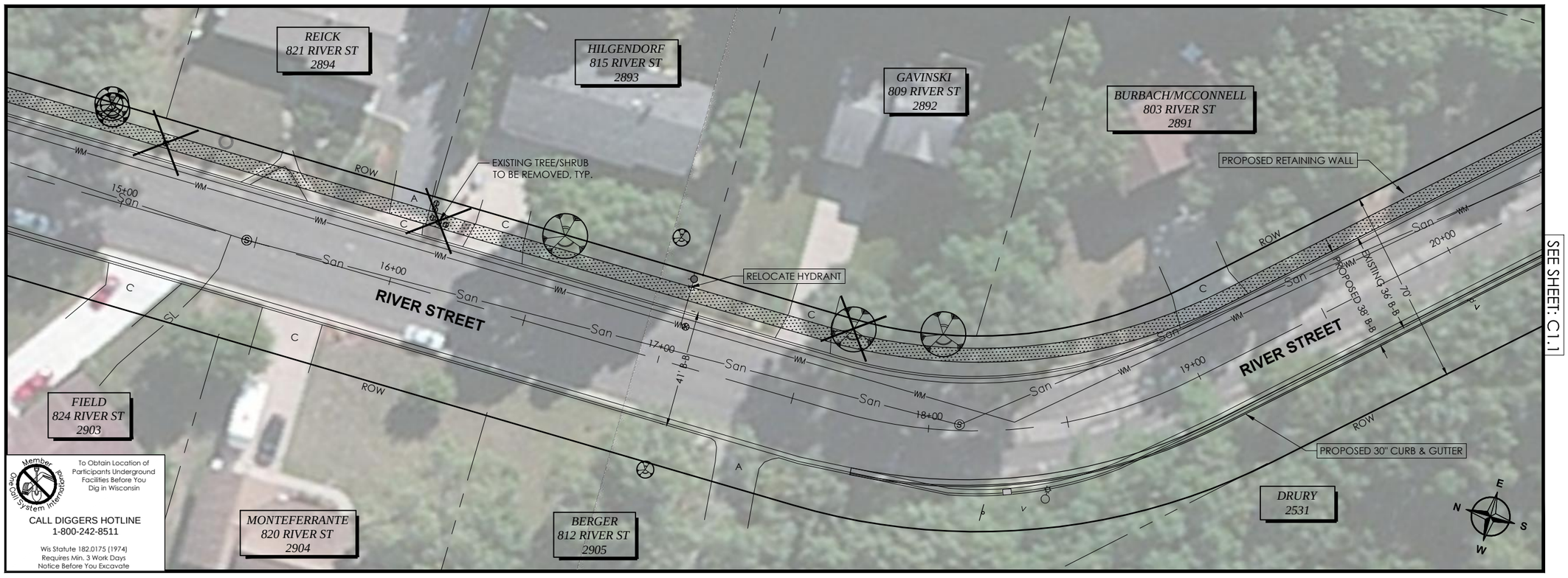

SEE SHEET: C1.1

GEC
General Engineering Company
P.O. Box 340 • 916 Silver Lake Dr. • Portage, WI 53901
608-742-2169 (Office) • 608-742-2592 (Fax)
www.generalengineering.net

This documes contains confidential or proprietary information of General Engineering Company. Substantial time, effort and money have been invested in the development of these documents and either in whole or in part except as specifically authorized by General Engineering Company.

PROPOSED SITE PLAN
2016 Street & Utility Improvements
City of Portage

City of Portage
Columbia County, WI

NO.	REVISIONS	BY	DATE

0 40
SCALE

DRAWN BY	BRU
REVIEWED BY	KDA
ISSUE DATE	Dec. 30, 2015
GEC FILE NO.	2-0115-1F
SHEET NO.	C2.0

G:\Current Files L-Q\Portage\2015 Projects\2-0115-1F 2016 Utility Reconstruction Project\CAD 2-0115-1F\2_CIVIL\Production Drawings\SP-2-0115-1F-RiverSt.dwg, 12/29/2015 4:37:47 PM

PRELIMINARY NOT FOR CONSTRUCTION

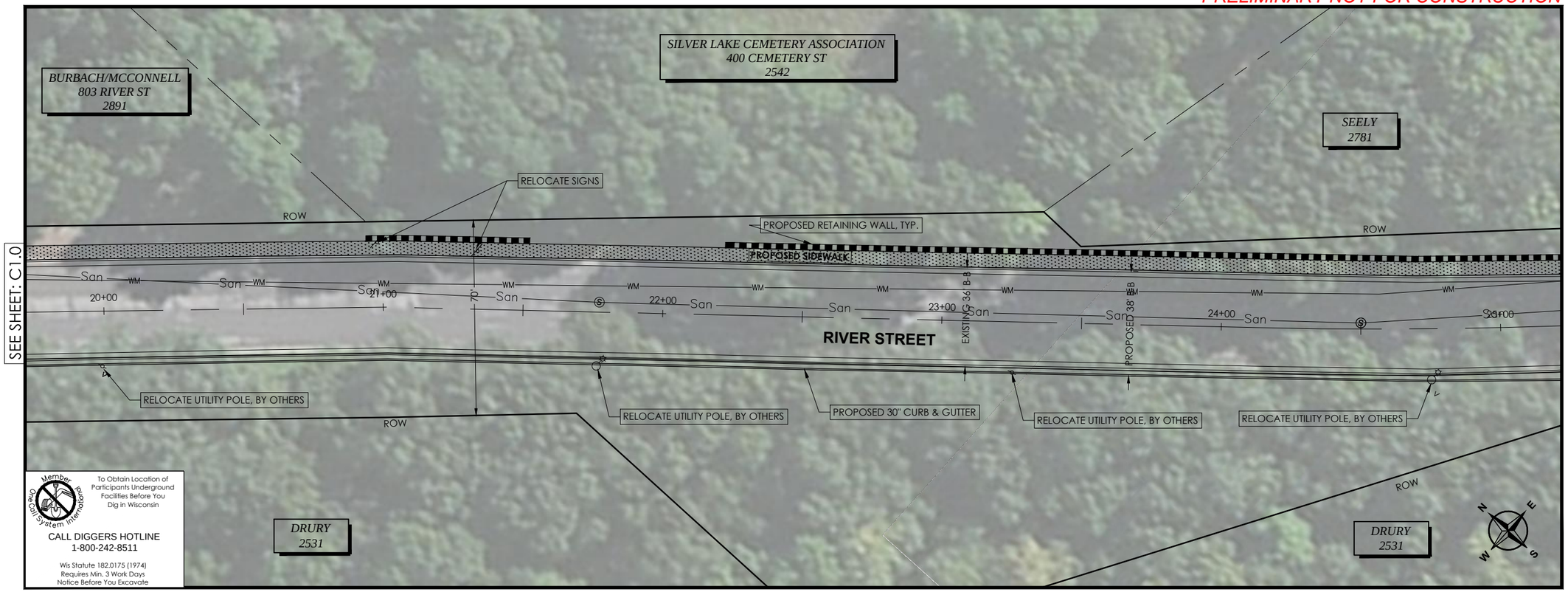

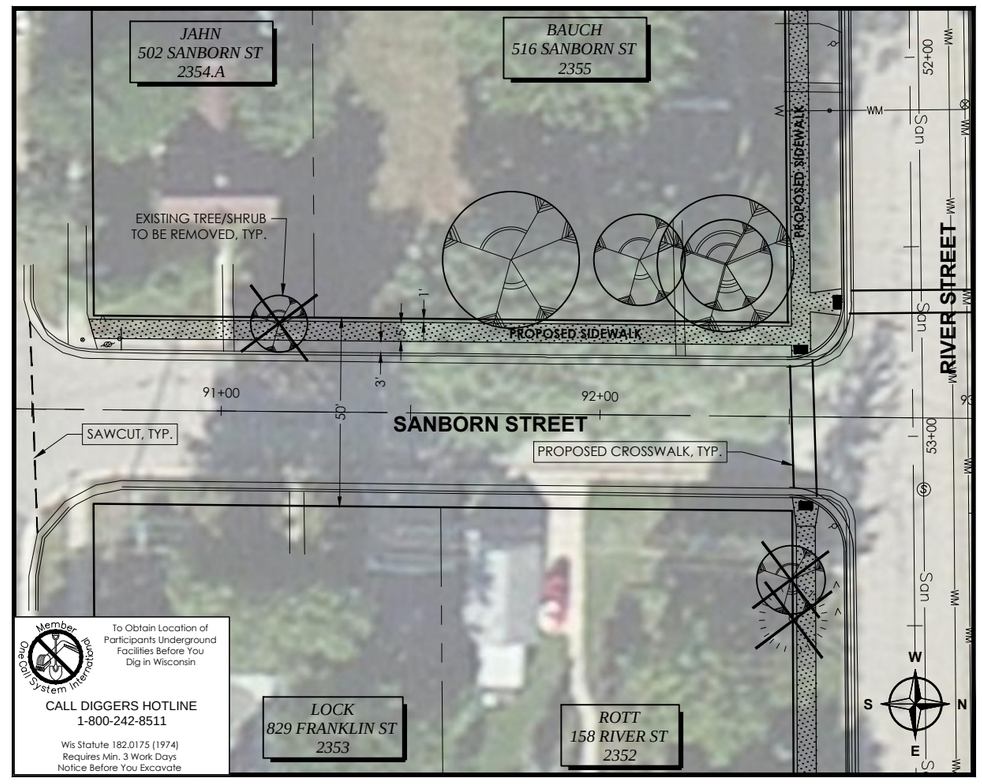

GEC

General Engineering Company

P.O. Box 340 • 916 Silver Lake Dr. • Portage, WI 53901
608-742-2169 (Office) • 608-742-2592 (Fax)
www.generalengineering.net

This document contains confidential or proprietary information of General Engineering Company. Substantial time, effort and expense has been expended in the preparation of this document. It may not be used or reproduced in whole or in part except as specifically authorized by General Engineering Company.

PROPOSED SITE PLAN
2016 Street & Utility Improvements
City of Portage

City of Portage
Columbia County, WI

REVISIONS	NO.	BY	DATE

0 40
SCALE

DRAWN BY	BRU
REVIEWED BY	KDA
ISSUE DATE	Dec. 30, 2015
GEC FILE NO.	2-0115-1F
SHEET NO.	C2.1

G:\Current Files L-Q\Portage\2015 Projects\2-0115-1F 2016 Utility Reconstruction Project\CAD 2-0115-1F\2_CIVIL\Production Drawings\SP-2-0115-1F-RiverSt.dwg, 12/30/2015 11:34:19 AM

PRELIMINARY NOT FOR CONSTRUCTION

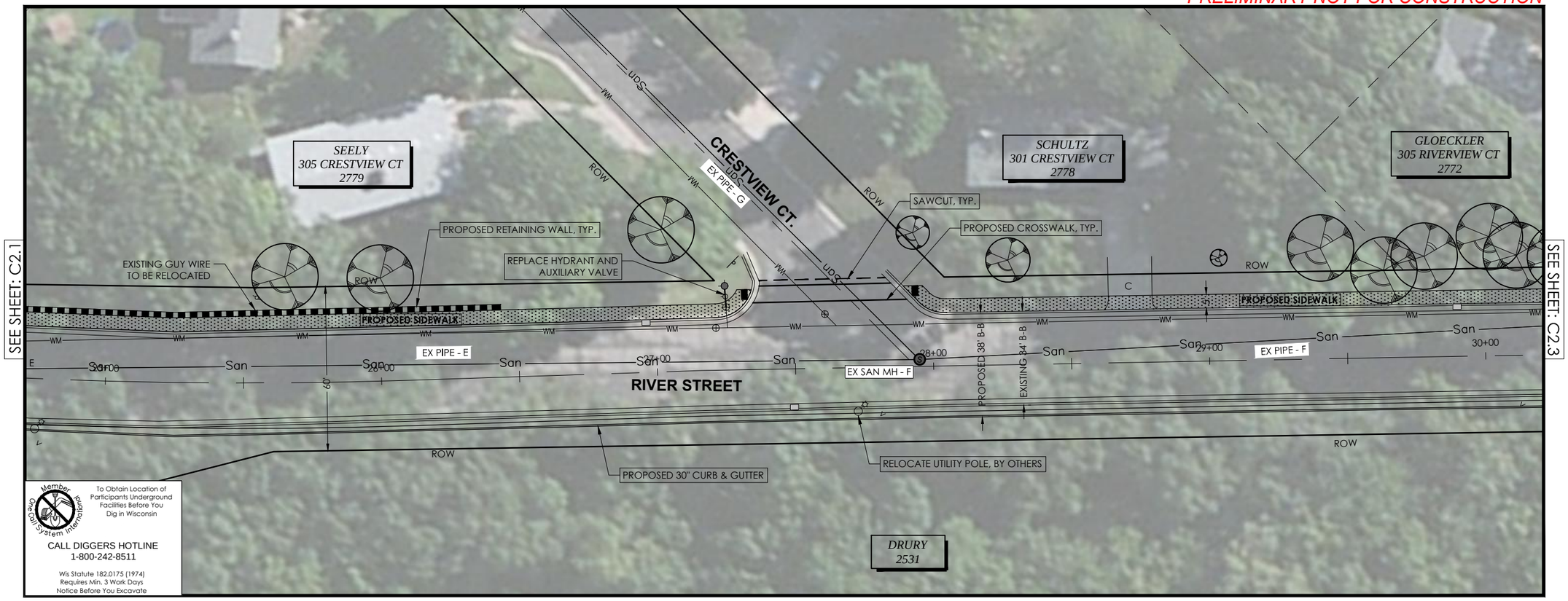

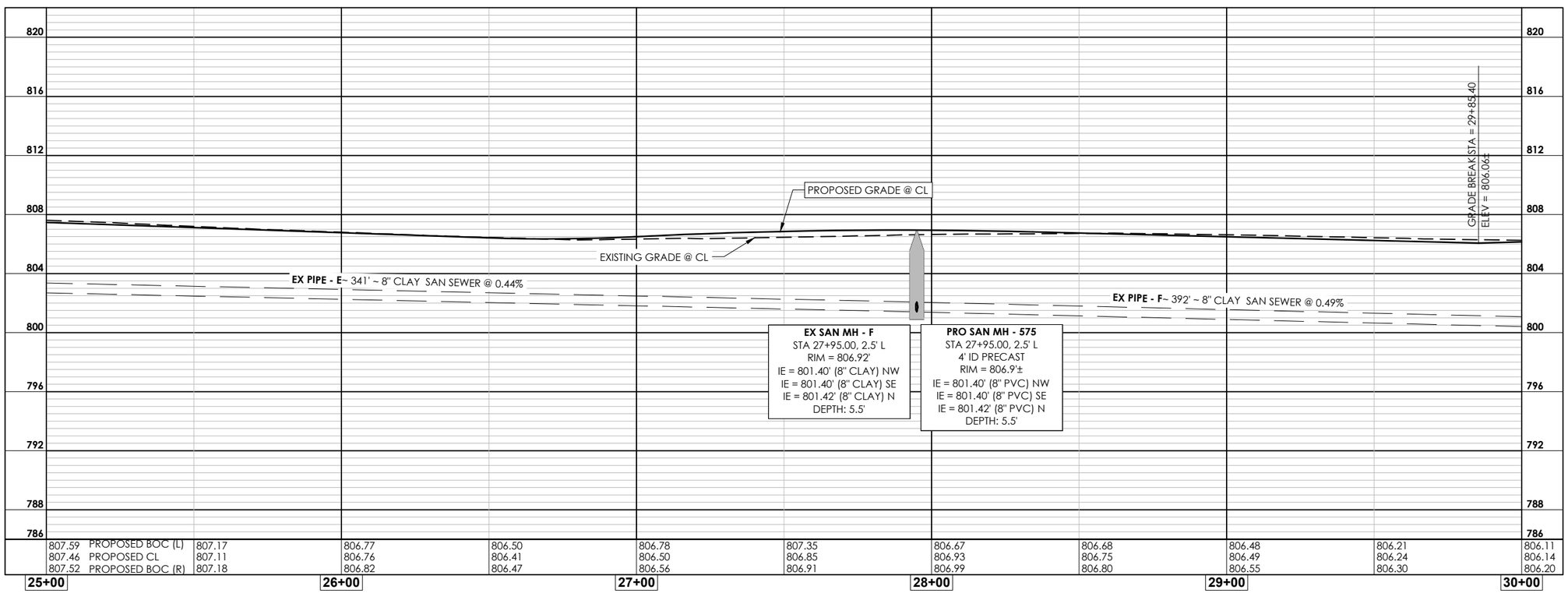

GEC
General Engineering Company
P.O. Box 340 • 916 Silver Lake Dr. • Portage, WI 53901
608-742-2169 (Office) • 608-742-2592 (Fax)
www.generalengineering.net

This document contains confidential or proprietary information of General Engineering Company. It may not be reproduced, revised or delivered to others without the express written permission of General Engineering Company, either in whole or in part except as specifically authorized by General Engineering Company.

PLAN & PROFILE
2016 Street & Utility Improvements
City of Portage

City of Portage
Columbia County, WI

NO.	REVISIONS	BY	DATE

N E S W

0 40
SCALE

DRAWN BY	BRU
REVIEWED BY	KDA
ISSUE DATE	Dec. 30, 2015
GEC FILE NO.	2-0115-1F
SHEET NO.	C2.2

G:\Current Files L-Q\Portage\2015 Projects\2-0115-1F 2016 Utility Reconstruction Project\CAD 2-0115-1F\2_CIVIL\Production Drawings\PP-2-0115-1F-RiverSt.dwg, 12/30/2015 8:50:36 AM

PRELIMINARY NOT FOR CONSTRUCTION

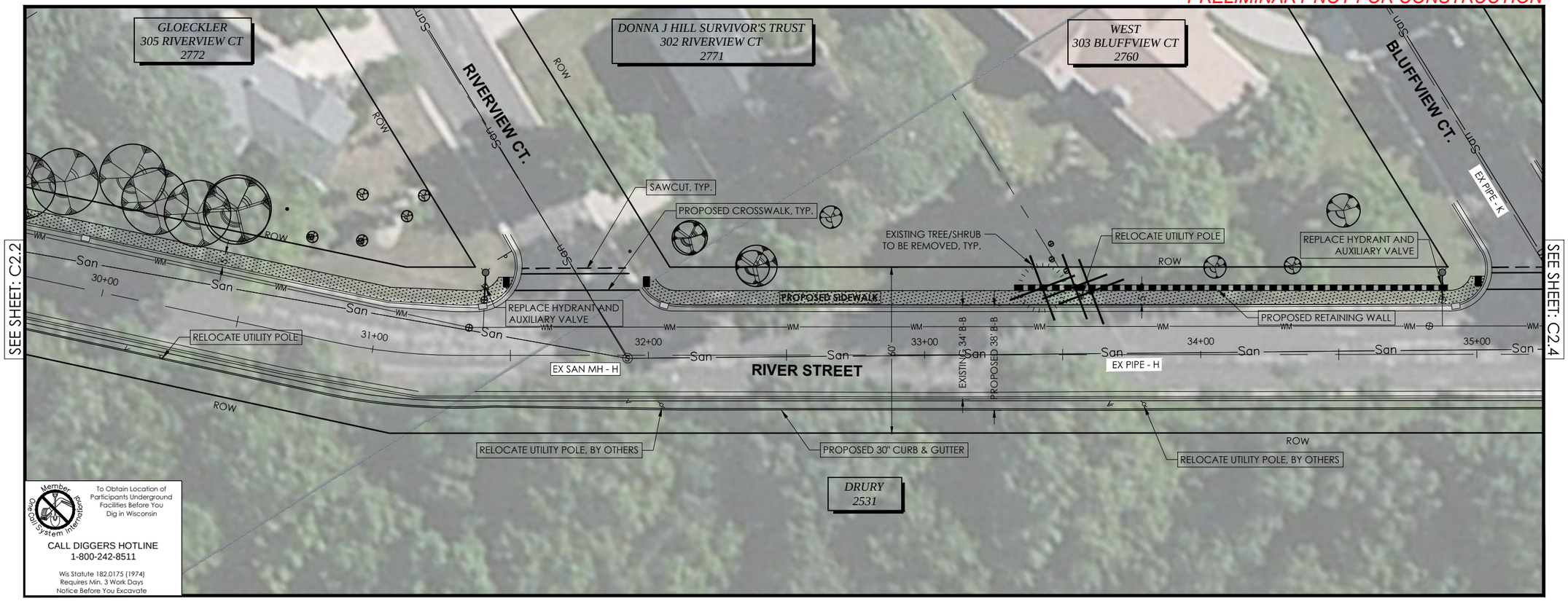

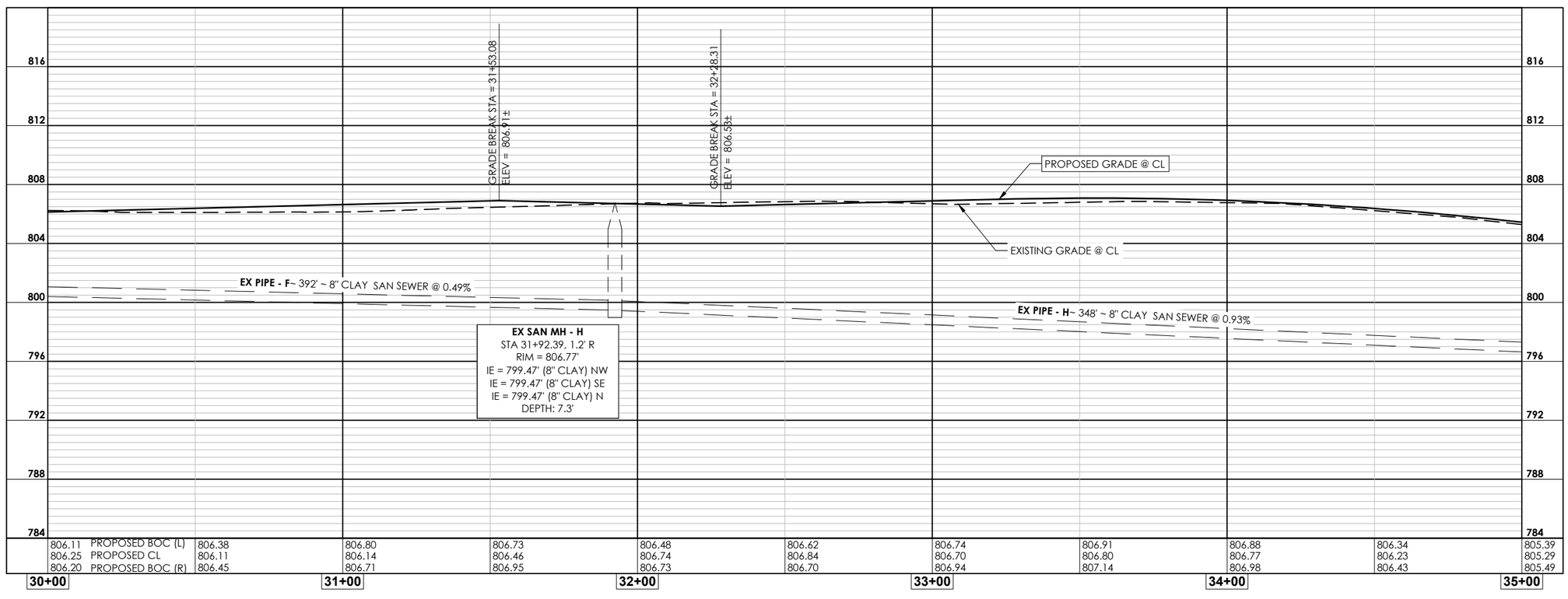

GEC

General Engineering Company
P.O. Box 340 • 916 Silver Lake Dr. • Portage, WI 53901
608-742-2169 (Office) • 608-742-2592 (Fax)
www.generalengineering.net

This document contains confidential or proprietary information of General Engineering Company. Unauthorized use or disclosure of the information contained herein is prohibited. This document shall not be reproduced, in whole or in part except as specifically authorized by General Engineering Company.

PLAN & PROFILE
2016 Street & Utility Improvements
City of Portage

City of Portage
Columbia County, WI

NO.	DATE	BY	REVISIONS

N E S W

0 40
SCALE

DRAWN BY	BRU
REVIEWED BY	KDA
ISSUE DATE	Dec. 30, 2015
GEC FILE NO.	2-0115-1F
SHEET NO.	C2.3

G:\Current Files L-Q\Portage\2015 Projects\2-0115-1F 2016 Utility Reconstruction Project\CAD 2-0115-1F\2_CIVIL\Production Drawings\PP-2-0115-1F-RiverSt.dwg, 12/30/2015 9:00:59 AM

PRELIMINARY NOT FOR CONSTRUCTION

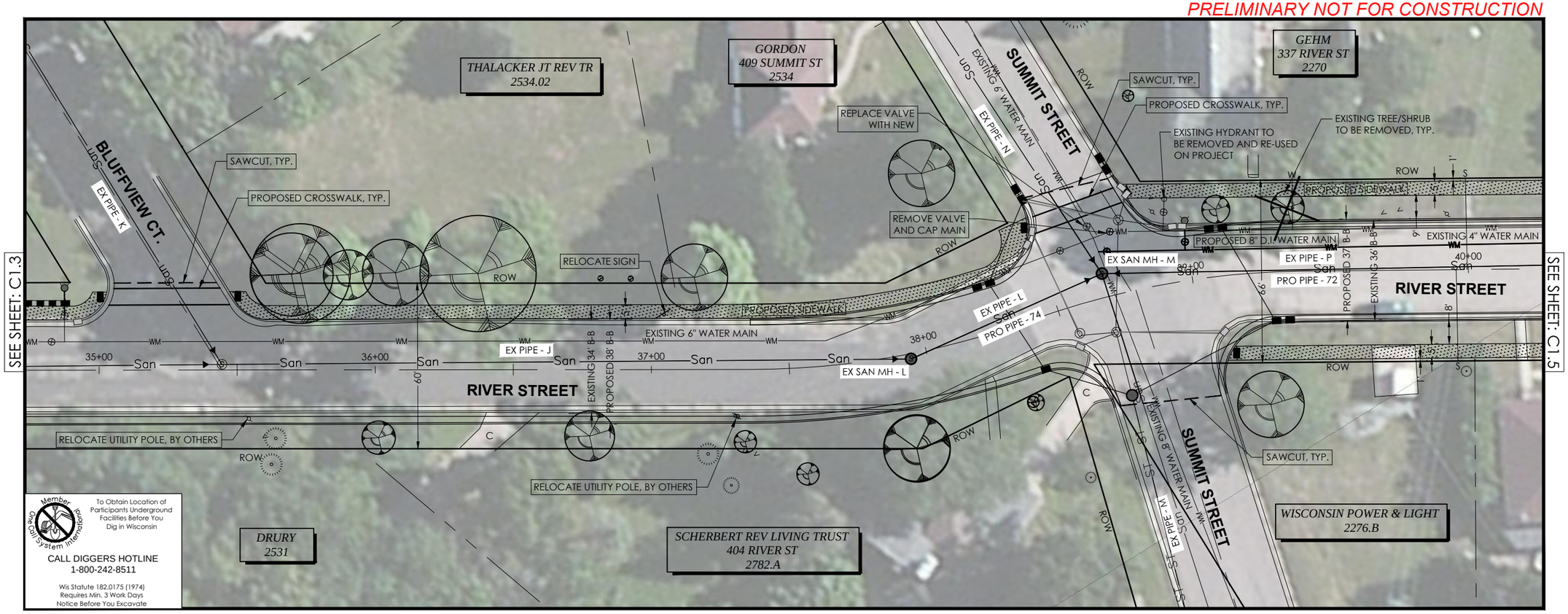

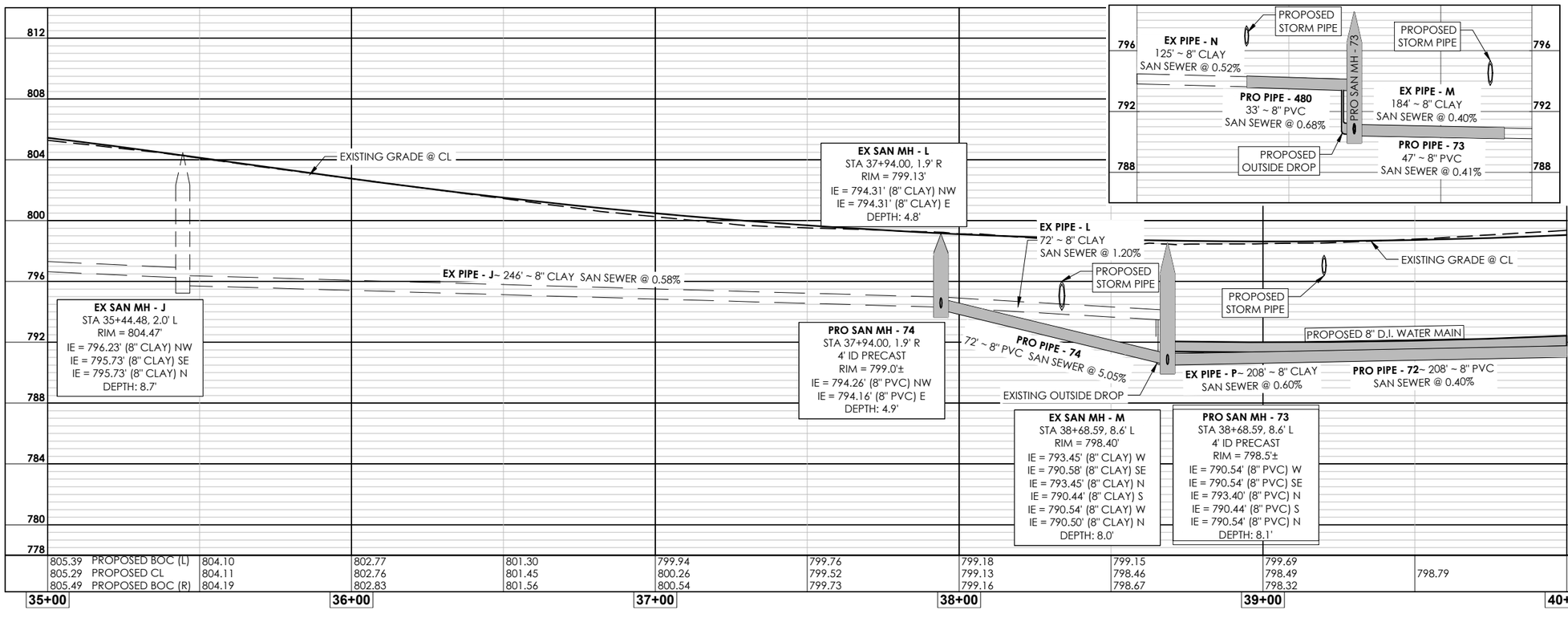

GEC
General Engineering Company
P.O. Box 340 • 916 Silver Lake Dr. • Portage, WI 53901
608-742-2169 (Office) • 608-742-2592 (Fax)
www.generalengineering.net

This document contains confidential or proprietary information of General Engineering Company. It may not be reproduced, revised or delivered to others without the express written permission of General Engineering Company, either in whole or in part except as specifically authorized by General Engineering Company.

PLAN & PROFILE
2016 Street & Utility Improvements
City of Portage

City of Portage
Columbia County, WI

REVISIONS	NO.	BY	DATE

N E S W

0 40
SCALE

DRAWN BY	BRU
REVIEWED BY	KDA
ISSUE DATE	Dec. 30, 2015
GEC FILE NO.	2-0115-1F
SHEET NO.	C2.4

G:\Current Files L-Q\Portage\2015 Projects\2-0115-1F 2016 Utility Reconstruction Project\CAD 2-0115-1F\2_CIVIL\Production Drawings\PP-2-0115-1F-RiverSt.dwg, 12/30/2015 10:17:11 AM

PRELIMINARY NOT FOR CONSTRUCTION

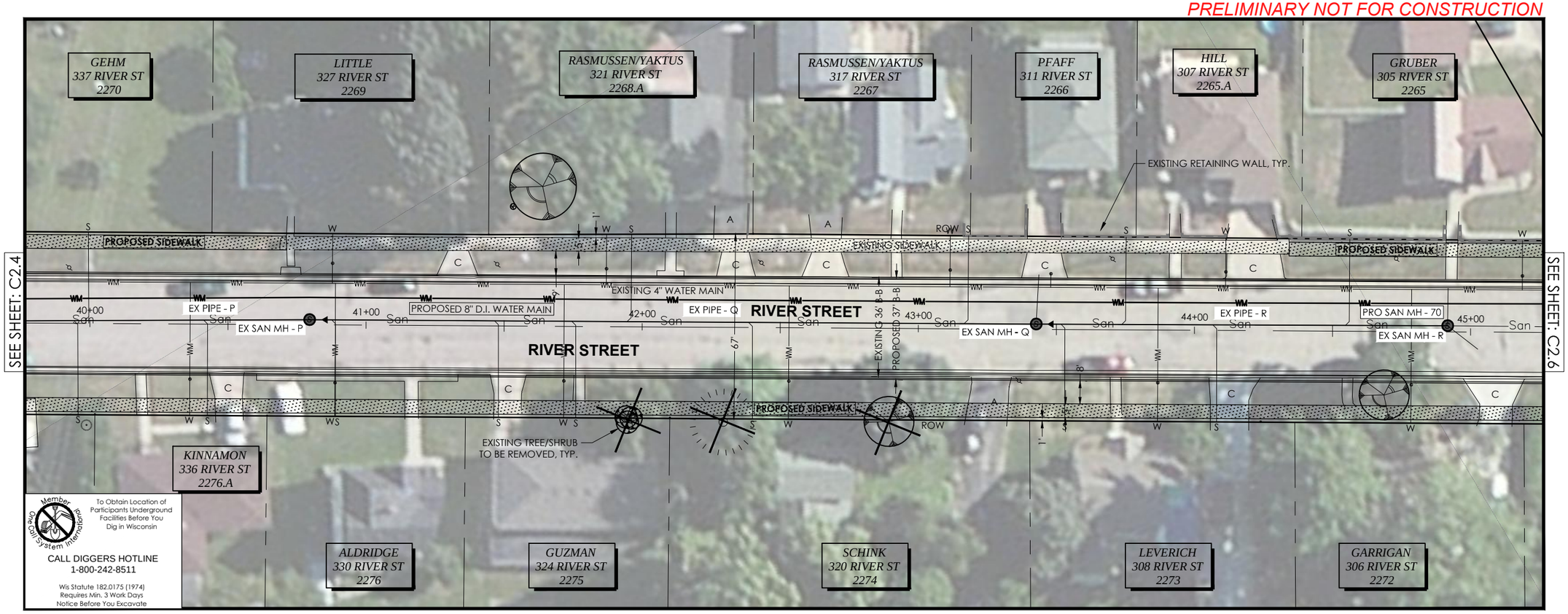

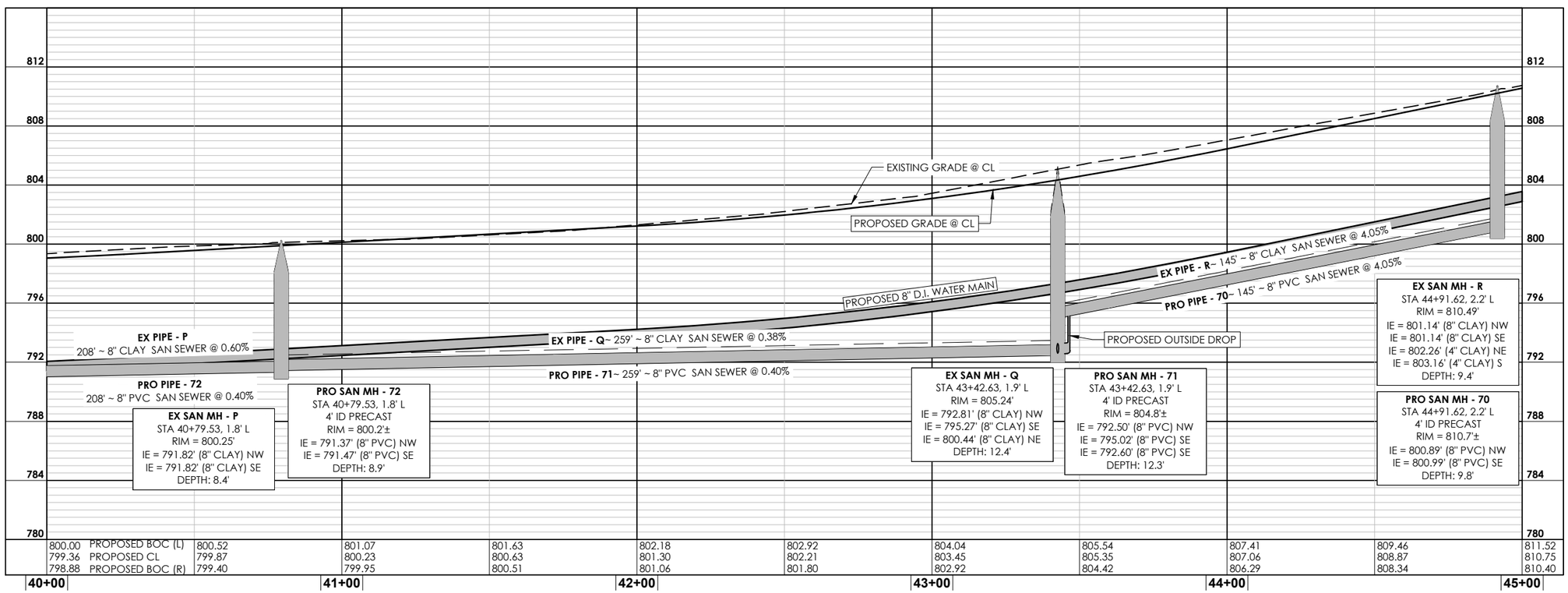

GEC

General Engineering Company

P.O. Box 340 • 916 Silver Lake Dr. • Portage, WI 53901
608-742-2169 (Office) • 608-742-2592 (Fax)
www.generalengineering.net

This document contains confidential or proprietary information of General Engineering Company. Modification or reproduction in whole or in part without written permission is prohibited. This document is to be returned to General Engineering Company upon request and is not to be reproduced or transferred to other parties in any form or medium without the express written permission of General Engineering Company.

PLAN & PROFILE
2016 Street & Utility Improvements
City of Portage

City of Portage
Columbia County, WI

REVISIONS	NO.	BY	DATE

N E S W

0 40
SCALE

DRAWN BY	BRU
REVIEWED BY	KDA
ISSUE DATE	Dec. 30, 2015
GEC FILE NO.	2-0115-1F
SHEET NO.	C2.5

G:\Current Files L-Q\Portage\2015 Projects\2-0115-1F 2016 Utility Reconstruction Project\CAD 2-0115-1F\2_CIVIL\Production Drawings\PP-2-0115-1F-RiverSt.dwg, 12/30/2015 10:55:00 AM

PRELIMINARY NOT FOR CONSTRUCTION

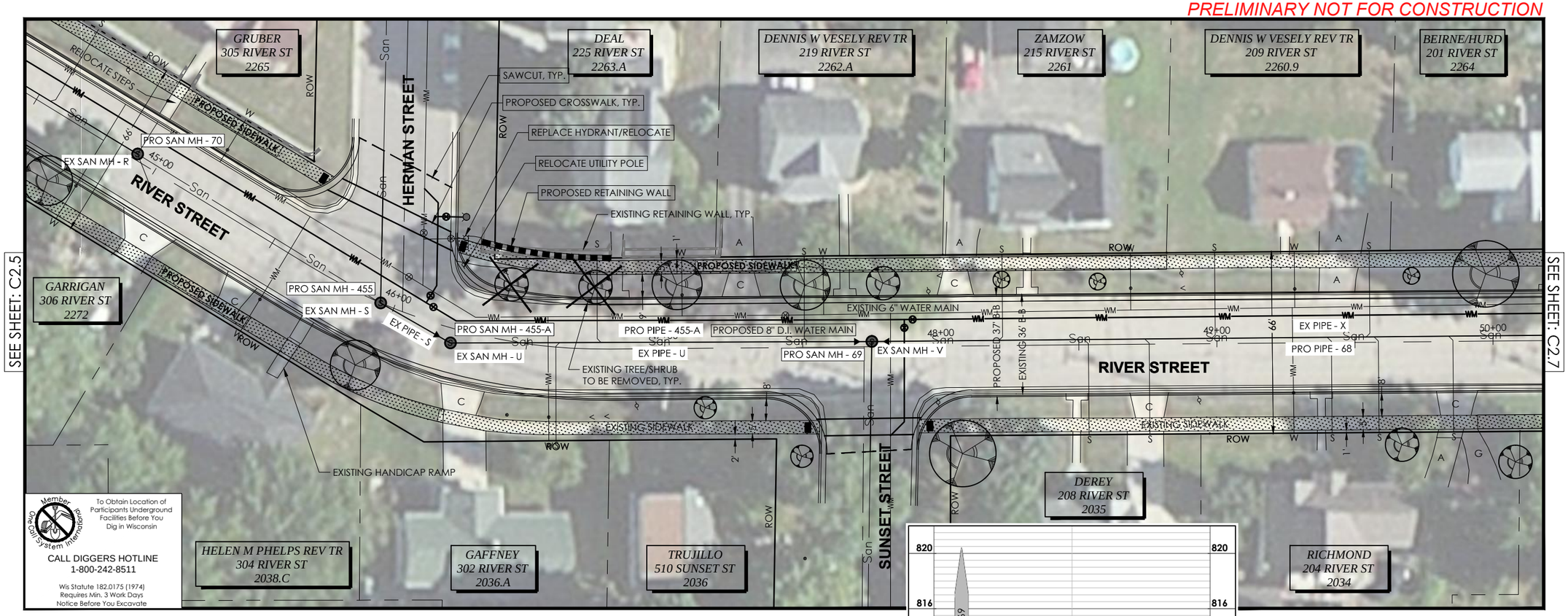

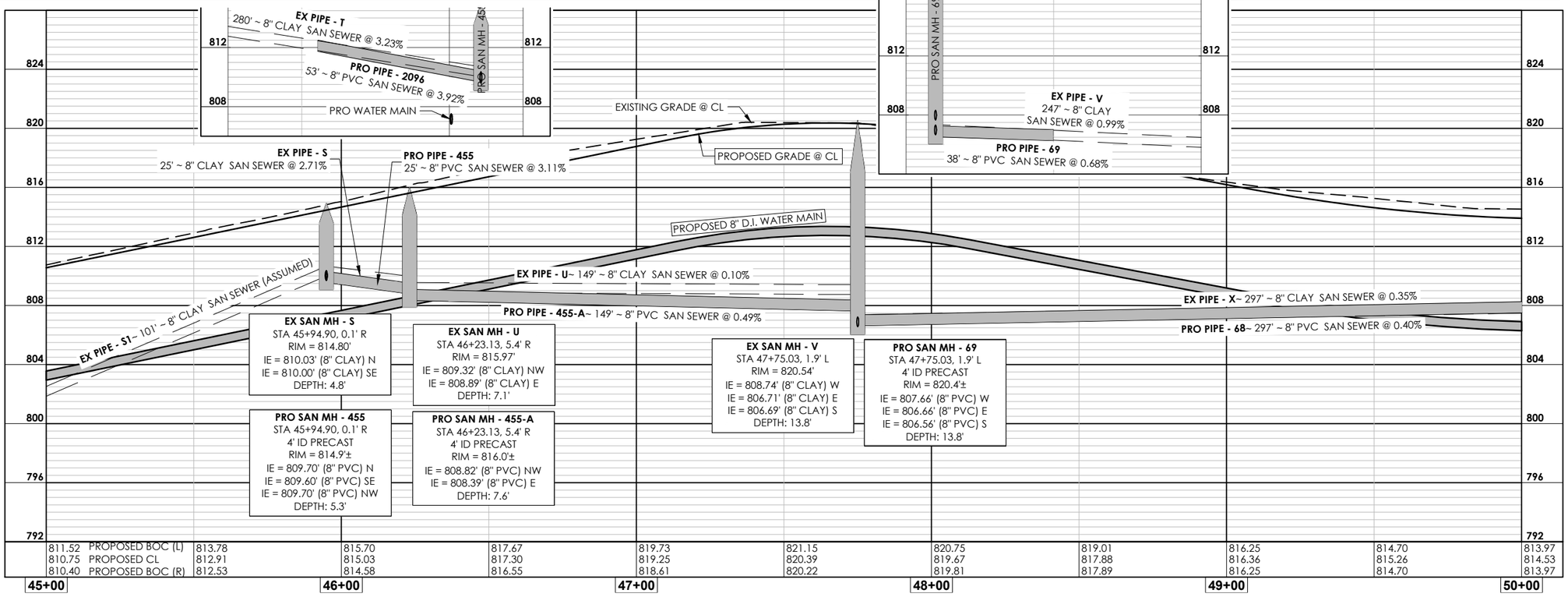

GEC
General Engineering Company
P.O. Box 340 • 916 Silver Lake Dr. • Portage, WI 53901
608-742-2169 (Office) • 608-742-2592 (Fax)
www.generalengineering.net

This document contains confidential or proprietary information of General Engineering Company. Substantial time, effort and expense have been invested in the design of this document and it may not be used in whole or in part except as specifically authorized by General Engineering Company.

PLAN & PROFILE
2016 Street & Utility Improvements
City of Portage

City of Portage
Columbia County, WI

DATE	BY	NO.	REVISIONS

N
W E
S
0 40
SCALE

DRAWN BY	BRU
REVIEWED BY	KDA
ISSUE DATE	Dec. 30, 2015
GEC FILE NO.	2-0115-1F
SHEET NO.	C2.6

G:\Current Files L-Q\Portage\2015 Projects\2-0115-1F 2016 Utility Reconstruction Project\CAD 2-0115-1F\2_CIVIL\Production Drawings\PP-2-0115-1F-RiverSt.dwg, 12/30/2015 11:03:44 AM

PRELIMINARY NOT FOR CONSTRUCTION

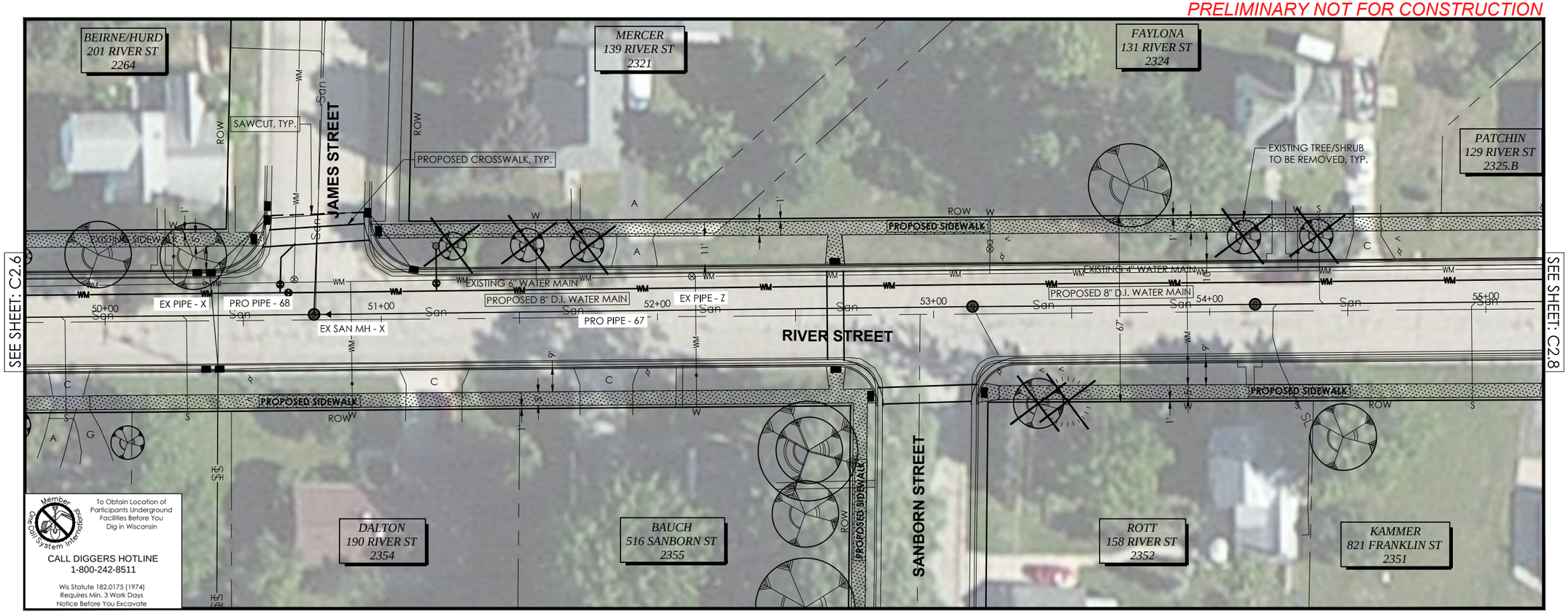

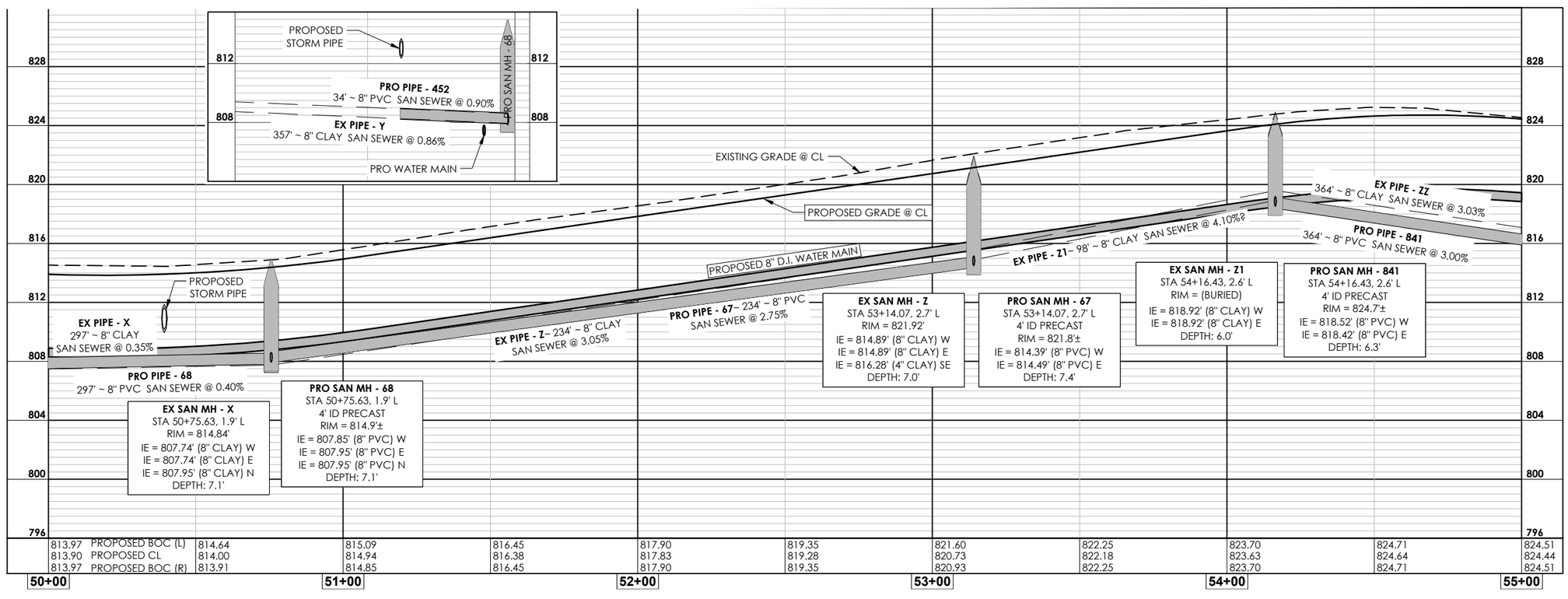

GEC
General Engineering Company
P.O. Box 340 • 916 Silver Lake Dr. • Portage, WI 53901
608-742-2169 (Office) • 608-742-2592 (Fax)
www.generalengineering.net

This documes contains confidential or proprietary information of General Engineering Company. Modification or reproduction without written permission is prohibited. This document is delivered either in whole or in part except as specifically authorized by General Engineering Company.

PLAN & PROFILE
2016 Street & Utility Improvements
City of Portage

City of Portage
Columbia County, WI

REVISIONS	NO.	BY	DATE

N W E S

0 40
SCALE

DRAWN BY	BRU
REVIEWED BY	KDA
ISSUE DATE	Dec. 30, 2015
GEC FILE NO.	2-0115-1F
SHEET NO.	C2.7

G:\Current Files L-Q\Portage\2015 Projects\2-0115-1F 2016 Utility Reconstruction Project\CAD 2-0115-1F\2_CIVIL\Production Drawings\PP-2-0115-1F-RiverSt.dwg, 12/30/2015 11:13:47 AM

PRELIMINARY NOT FOR CONSTRUCTION

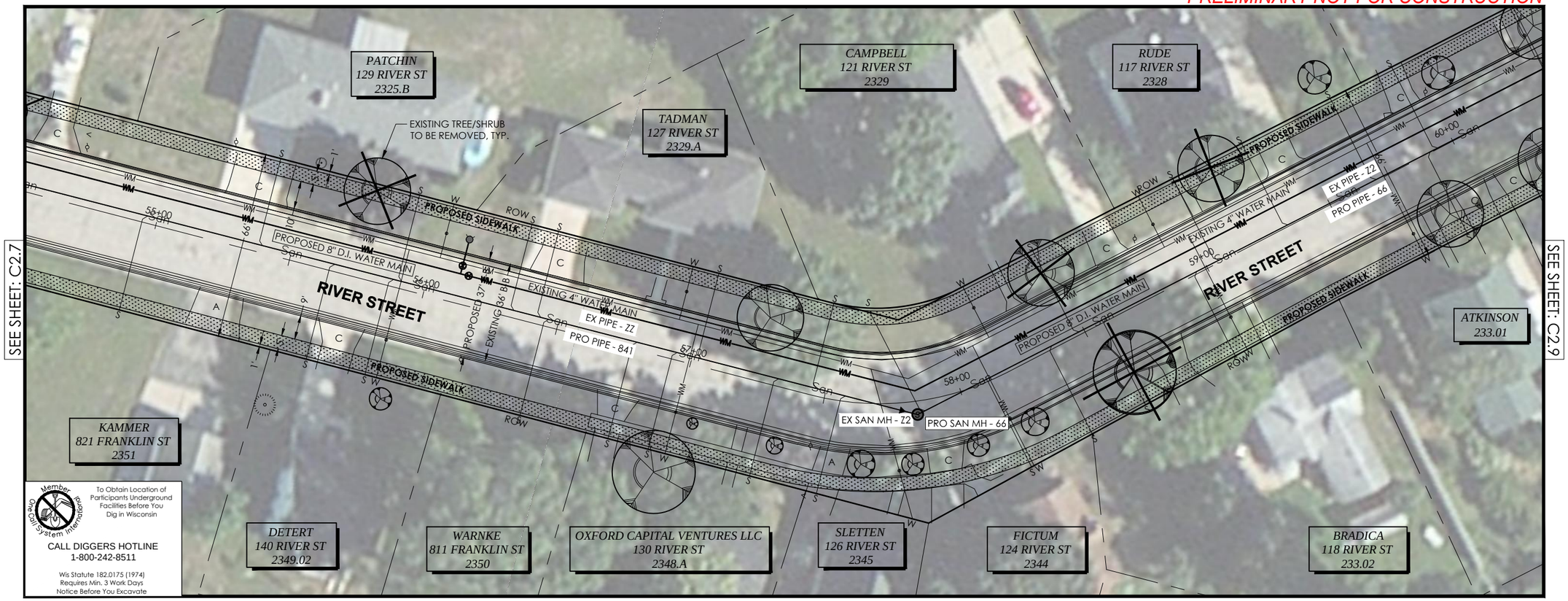

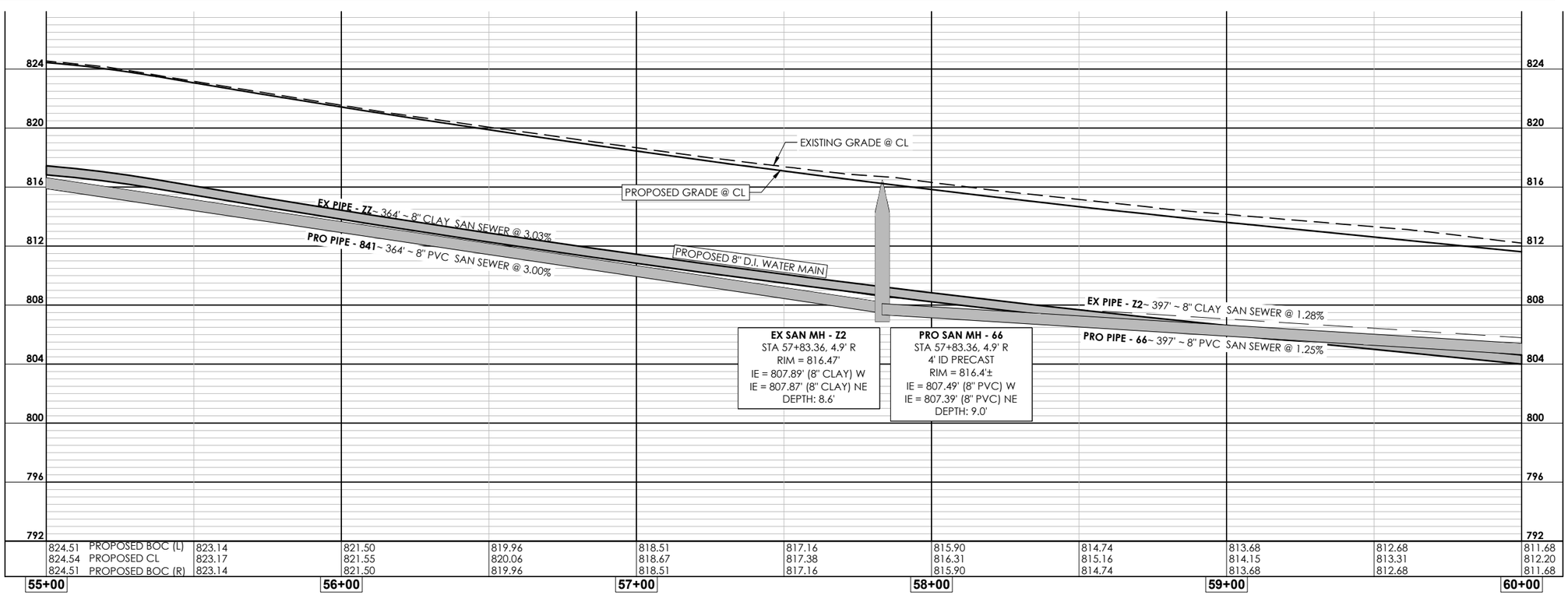

GEC
General Engineering Company
P.O. Box 340 • 916 Silver Lake Dr. • Portage, WI 53901
608-742-2169 (Office) • 608-742-2592 (Fax)
www.generalengineering.net

This document contains confidential or proprietary information of General Engineering Company. Unauthorized use or disclosure of the information contained herein is prohibited. This document shall not be reproduced in whole or in part except as specifically authorized by General Engineering Company.

PLAN & PROFILE
2016 Street &Utility Improvements
City of Portage

City of Portage
Columbia County, WI

NO.	DATE	BY	REVISIONS

N W E S

0 40
SCALE

DRAWN BY	BRU
REVIEWED BY	KDA
ISSUE DATE	Dec. 30, 2015
GEC FILE NO.	2-0115-1F
SHEET NO.	C2.8

G:\Current Files L-Q\Portage\2015 Projects\2-0115-1F 2016 Utility Reconstruction Project\CAD 2-0115-1F\2_CIVIL\Production Drawings\PP-2-0115-1F-RiverSt.dwg, 12/30/2015 11:18:20 AM

PRELIMINARY NOT FOR CONSTRUCTION

PRO LINE - 441
12" RCP
LENGTH: 25'
SLOPE: 4.39%

PRO LINE - 442
12" RCP
LENGTH: 33'
SLOPE: 1.00%

PRO LINE - 443
12" RCP
LENGTH: 60'
SLOPE: 2.99%

PRO INLET - 440
4' ID PRECAST
NEENAH R-3067
TYPE L GRATE
TC ELEV = 808.56'
FL ELEV = 807.89'
IE = 805.39' (12" RCP) SW
IE = 804.32' (12" RCP) E
IE = 805.39' (12" RCP) NW
DEPTH: 4.2'

PRO INLET - 441
2'x3' CURB INLET
NEENAH R-3067
TYPE L GRATE
TC ELEV = 809.33'
FL ELEV = 808.66'
IE = 806.49' (12" RCP) NW
IE = 806.49' (12" RCP) NE
DEPTH: 2.8'

PRO INLET - 442
2'x3' CURB INLET
NEENAH R-3067
TYPE L GRATE
TC ELEV = 809.32'
FL ELEV = 808.65'
IE = 806.82' (12" RCP) SE
DEPTH: 2.5'

PRO INLET - 443
2'x3' CURB INLET
NEENAH R-3067
TYPE L GRATE
TC ELEV = 809.68'
FL ELEV = 809.01'
IE = 807.18' (12" RCP) SE
DEPTH: 2.5'

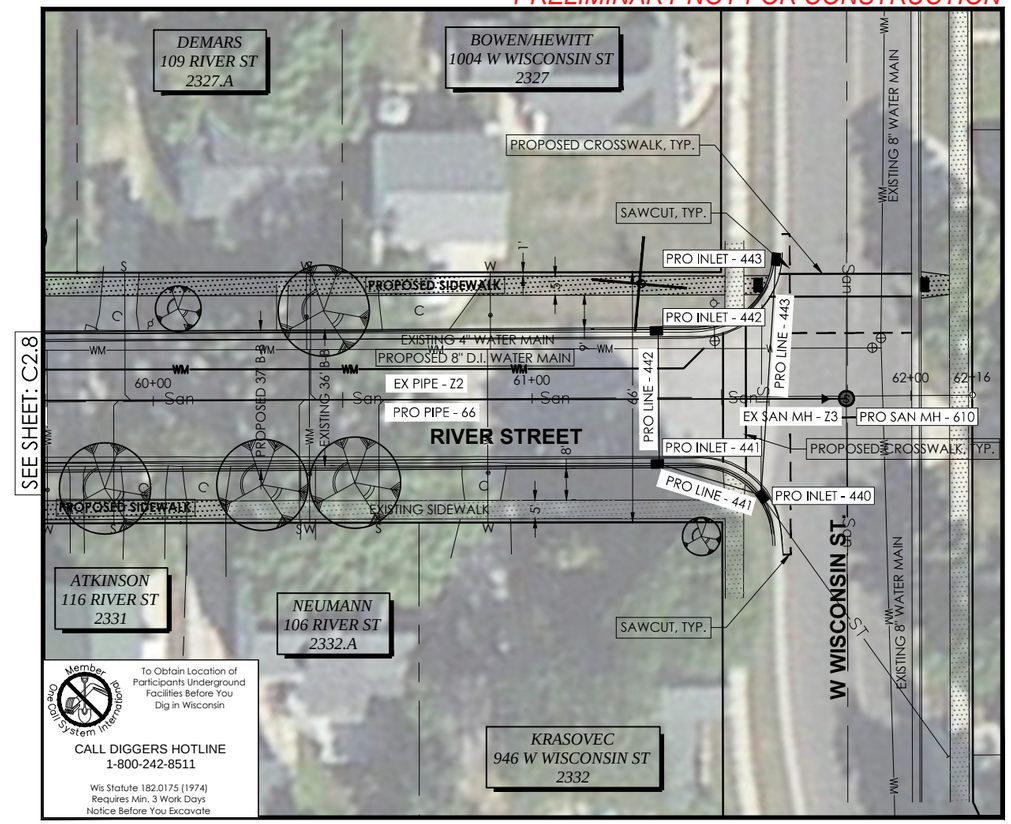

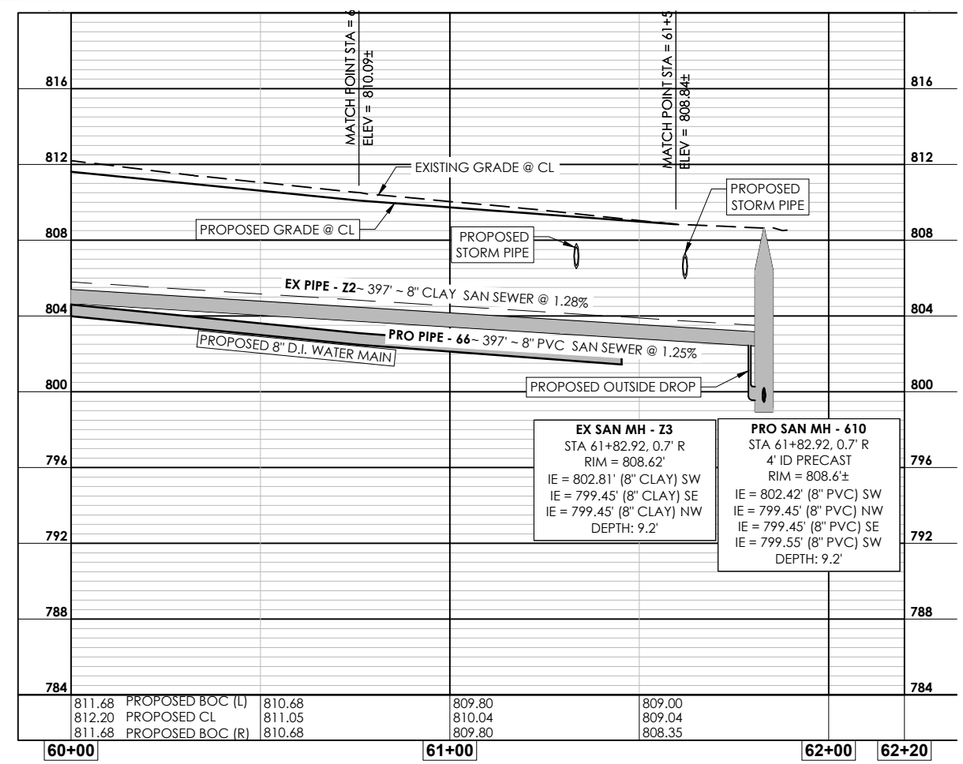

General Engineering Company
P.O. Box 340 • 916 Silver Lake Dr. • Portage, WI 53901
608-742-2169 (Office) • 608-742-2592 (Fax)
www.generalengineering.net

This documes contains confidential or proprietary information of General Engineering Company. Modification or distribution without written consent of General Engineering Company is prohibited, and only valid for the purpose for which it was designed, either in whole or in part except as specifically authorized by General Engineering Company.

PLAN & PROFILE
2016 Street &Utility Improvements
City of Portage

City of Portage
Columbia County, WI

DATE	BY	NO.	REVISIONS

0 40
SCALE

DRAWN BY	BRU
REVIEWED BY	KDA
ISSUE DATE	Dec. 30, 2015
GEC FILE NO.	2-0115-1F
SHEET NO.	C2.9

G:\Current Files L-Q\Portage\2015 Projects\2-0115-1F 2016 Utility Reconstruction Project\CAD 2-0115-1F\2_CIVIL\Production Drawings\PP-2-0115-1F-RiverSt.dwg, 12/30/2015 11:24:10 AM

PRELIMINARY NOT FOR CONSTRUCTION

PRO INLET - 453 2'x3' CURB INLET NEENAH R-3067 TYPE L GRATE TC ELEV = 799.41' FL ELEV = 798.74' IE = 796.91' (12" RCP) S DEPTH: 2.5'	**PRO INLET - 454** 2'x3' CURB INLET NEENAH R-3067 TYPE L GRATE TC ELEV = 799.36' FL ELEV = 798.69' IE = 796.37' (12" RCP) E IE = 796.12' (15" RCP) SW IE = 796.86' (12" RCP) N DEPTH: 3.2'	**PRO INLET - 456** 2'x3' CURB INLET NEENAH R-3067 TYPE L GRATE TC ELEV = 799.18' FL ELEV = 798.51' IE = 796.68' (12" RCP) W IE = 796.68' (12" RCP) N DEPTH: 2.5'	**PRO INLET - 457** 2'x3' CURB INLET NEENAH R-3067 TYPE L GRATE TC ELEV = 799.37' FL ELEV = 798.70' IE = 796.87' (12" RCP) S DEPTH: 2.5'	**PRO INLET - 458** 2'x3' CURB INLET NEENAH R-3067 TYPE R GRATE TC ELEV = 800.13' FL ELEV = 799.46' IE = 797.61' (12" RCP) NW IE = 797.61' (12" RCP) S DEPTH: 2.5'	**PRO INLET - 459** 2'x3' CURB INLET NEENAH R-3067 TYPE R GRATE TC ELEV = 800.14' FL ELEV = 799.47' IE = 797.64' (12" RCP) SE DEPTH: 2.5'
PRO INLET - 461 2'x3' CURB INLET NEENAH R-3067 TYPE R GRATE TC ELEV = 799.44' FL ELEV = 798.77' IE = 794.90' (15" RCP) NE IE = 794.65' (18" RCP) S IE = 796.49' (12" RCP) W DEPTH: 4.8'	**PRO INLET - 462** 2'x3' CURB INLET NEENAH R-3067 TYPE R GRATE TC ELEV = 799.01' FL ELEV = 798.34' IE = 796.53' (12" RCP) E DEPTH: 2.5'	**PRO INLET - 463** 2'x3' CURB INLET NEENAH R-3067 TYPE L GRATE TC ELEV = 799.16' FL ELEV = 798.49' IE = 793.93' (18" RCP) SE IE = 793.96' (18" RCP) N DEPTH: 5.2'	**PRO STM MH - 464** 4' ID PRECAST NEENAH R-1556 TYPE B COVER RIM = 798.2'± IE = 791.84' (36" RCP) S IE = 793.34' (18" RCP) NW IE = 793.84' (15" RCP) E DEPTH: 6.4'	**PRO INLET - 465** 2'x3' CURB INLET NEENAH R-3067 TYPE L GRATE TC ELEV = 798.60' FL ELEV = 797.93' IE = 795.23' (15" RCP) W IE = 795.48' (12" RCP) SE IE = 795.48' (12" RCP) N DEPTH: 3.4'	**PRO INLET - 465A** 2'x3' CURB INLET NEENAH R-3067 TYPE L GRATE TC ELEV = 798.53' FL ELEV = 797.86' IE = 795.51' (12" RCP) NW DEPTH: 3.0'

PRO LINE - 453 12" RCP LENGTH: 3' SLOPE: 1.94%	**PRO LINE - 454** 15" RCP LENGTH: 29' SLOPE: 4.14%	**PRO LINE - 456** 12" RCP LENGTH: 30' SLOPE: 1.00%	**PRO LINE - 457** 12" RCP LENGTH: 3' SLOPE: 6.86%	**PRO LINE - 458** 12" RCP LENGTH: 37' SLOPE: 5.80%	**PRO LINE - 459** 12" RCP LENGTH: 3' SLOPE: 1.00%
	PRO LINE - 461 18" RCP LENGTH: 35' SLOPE: 1.96%	**PRO LINE - 462** 12" RCP LENGTH: 3' SLOPE: 1.40%	**PRO LINE - 463** 18" RCP LENGTH: 30' SLOPE: 2.00%	**PRO LINE - 465** 15" RCP LENGTH: 55' SLOPE: 2.50%	**PRO LINE - 465A** 12" RCP LENGTH: 3' SLOPE: 1.00%

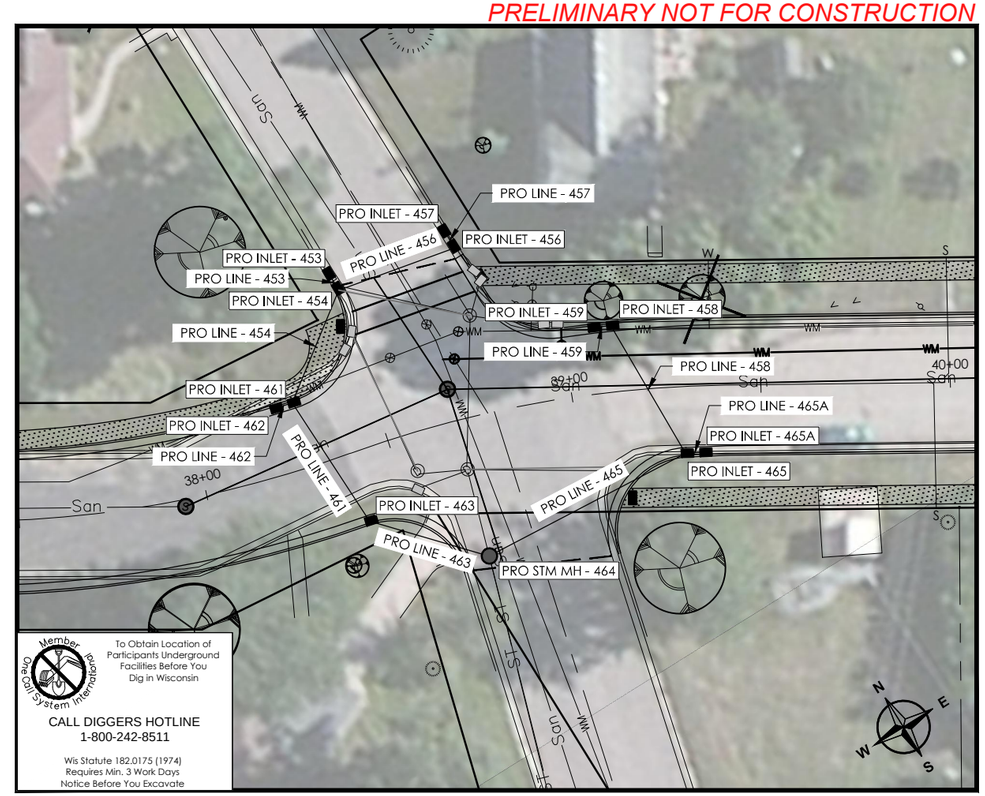

PRO INLET - 505 2'x3' CURB INLET NEENAH R-3067 TYPE R GRATE TC ELEV = 815.44' FL ELEV = 814.77' IE = 812.94' (12" RCP) NW DEPTH: 2.5'	**PRO INLET - 506** 2'x3' CURB INLET NEENAH R-3067 TYPE L GRATE TC ELEV = 815.83' FL ELEV = 815.16' IE = 812.82' (12" RCP) W IE = 812.82' (12" RCP) SE DEPTH: 3.0'	**PRO INLET - 507** 2'x3' CURB INLET NEENAH R-3067 TYPE L GRATE TC ELEV = 814.76' FL ELEV = 814.09' IE = 811.98' (15" RCP) SW IE = 812.23' (12" RCP) N IE = 812.23' (12" RCP) E DEPTH: 2.8'	**PRO INLET - 507A** 2'x3' CURB INLET NEENAH R-3067 TYPE L GRATE TC ELEV = 814.72' FL ELEV = 814.05' IE = 812.25' (12" RCP) S DEPTH: 2.5'
PRO INLET - 508 2'x3' CURB INLET NEENAH R-3067 TYPE R GRATE TC ELEV = 814.00' FL ELEV = 813.33' IE = 810.74' (18" RCP) S IE = 810.99' (15" RCP) NE IE = 811.24' (12" RCP) W DEPTH: 3.3'	**PRO INLET - 509** 2'x3' CURB INLET NEENAH R-3067 TYPE R GRATE TC ELEV = 813.97' FL ELEV = 813.30' IE = 811.47' (12" RCP) E DEPTH: 2.5'	**PRO INLET - 510** 2'x3' CURB INLET NEENAH R-3067 TYPE R GRATE TC ELEV = 813.99' FL ELEV = 813.32' IE = 811.49' (12" RCP) E DEPTH: 2.5'	**PRO INLET - 511** 2'x3' CURB INLET NEENAH R-3067 TYPE R GRATE TC ELEV = 813.94' FL ELEV = 813.27' IE = 808.89' (18" RCP) S IE = 809.58' (18" RCP) N IE = 811.44' (12" RCP) W DEPTH: 5.0'

PRO LINE - 505 12" RCP LENGTH: 24' SLOPE: 0.50%	**PRO LINE - 506** 12" RCP LENGTH: 35' SLOPE: 1.70%	**PRO LINE - 507** 15" RCP LENGTH: 26' SLOPE: 3.88%	**PRO LINE - 507A** 12" RCP LENGTH: 3' SLOPE: 0.66%
	PRO LINE - 508 18" RCP LENGTH: 33' SLOPE: 3.50%	**PRO LINE - 509** 12" RCP LENGTH: 3' SLOPE: 7.69%	**PRO LINE - 510** 12" RCP LENGTH: 3' SLOPE: 1.73%

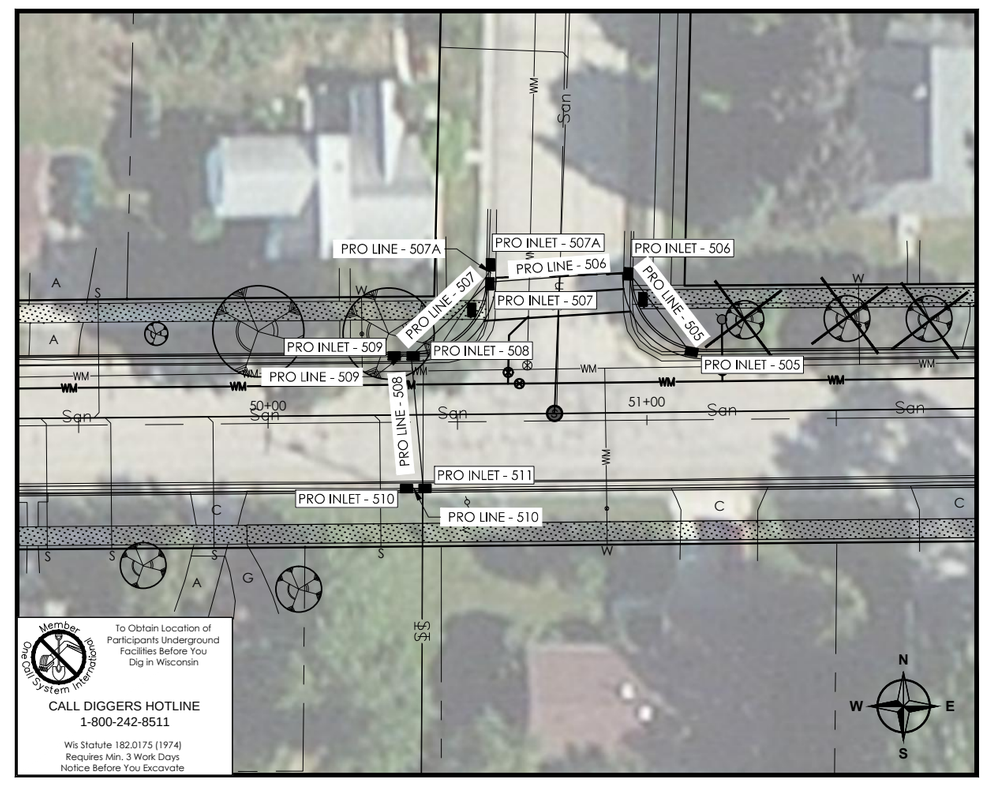

GEC

General Engineering Company

P.O. Box 340 • 916 Silver Lake Dr. • Portage, WI 53901
608-742-2169 (Office) • 608-742-2592 (Fax)
www.generalengineering.net

This documes contains confidential or proprietary information of General Engineering Company. Without written permission, this document is not to be used for any purpose other than that for which it is intended or reproduced either in whole or in part except as specifically authorized by General Engineering Company.

STORM SEWER PLAN
2016 Street &Utility Improvements
City of Portage

City of Portage
Columbia County, WI

DATE	BY	NO.	REVISIONS

0 40
SCALE

DRAWN BY	BRU
REVIEWED BY	KDA
ISSUE DATE	Dec. 30, 2015
GEC FILE NO.	2-0115-1F
SHEET NO.	C3.0

G:\Current Files L-Q\Portage\2015 Projects\2-0115-1F 2016 Utility Reconstruction Project\CAD 2-0115-1F\2_CIVIL\Production Drawings\PP-2-0115-1F-RiverSt.dwg, 12/30/2015 11:31:03 AM

PRELIMINARY NOT FOR CONSTRUCTION

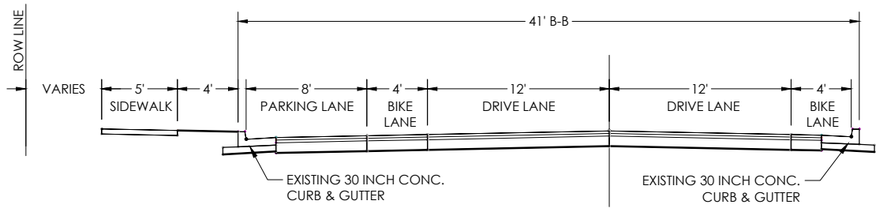

RIVER STREET

STA: 10+50 TO 18+00

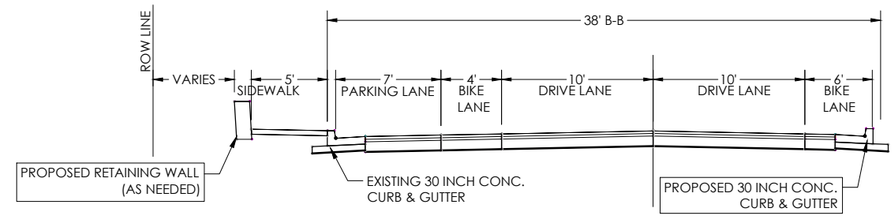

RIVER STREET

STA: 18+00 TO 38+50

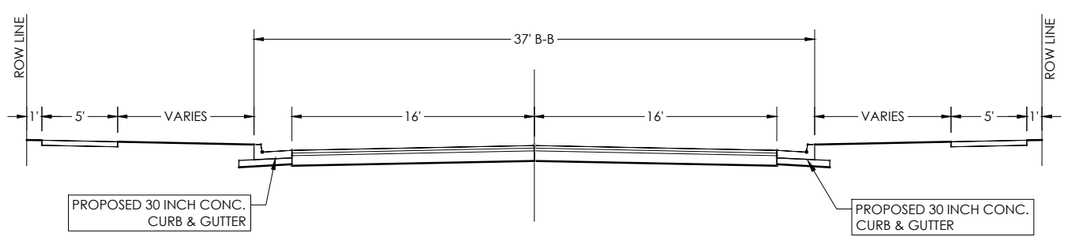

RIVER STREET

STA: 39+00 TO 61+50

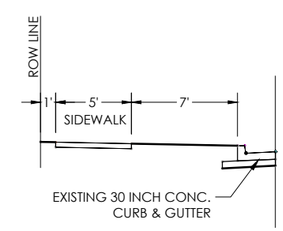

SANBORN STREET

STA: 90+65 TO 92+50

GEC

General Engineering Company

P.O. Box 340 • 916 Silver Lake Dr. • Portage, WI 53901

608-742-2169 (Office) • 608-742-2592 (Fax)

www.generalengineering.net

This document contains confidential or proprietary information of General Engineering Company. Neither this document nor the information contained herein may be reproduced or disclosed, in whole or in part except as specifically authorized by General Engineering Company.

TYPICAL SECTIONS

2016 Street & Utility Improvements

City of Portage

City of Portage
Columbia County, WI

REVISIONS	NO.	BY	DATE

0 10

SCALE

DRAWN BY BRU

DATE Dec. 21, 2015

GEC FILE NO. 2-0115-1F

SHEET NO.

C4.0

G:\Current Files L-Q\Portage\2015 Projects\2-0115-1F 2016 Utility Reconstruction Project\CAD 2-0115-1F\2_CIVIL\Production Drawings\2-0115-1F-TypicalSections.dwg, 12/21/2015 11:54:44 AM

PRELIMINARY NOT FOR CONSTRUCTION

NOTES:

1. HORIZONTAL BRACE WITH 2" X 4" WOODEN FRAME OR EQUIVALENT AT TOP OF POST AS DIRECTED BY THE ENGINEER.
2. TRENCH SHALL BE A MINIMUM OF 4" WIDE BY 6" DEEP TO BURY AND ANCHOR THE GEOTEXTILE FABRIC, FOLD MATERIAL TO FIT TRENCH AND BACKFILL AND COMPACT TRENCH AND COMPACT WITH EXCAVATED SOIL.
3. WOOD POST SHALL BE A MINIMUM SIZE OF 1 1/8" X 1 1/8" OF OAK OR HICKORY.

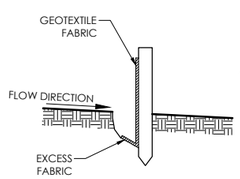

TRENCH DETAIL

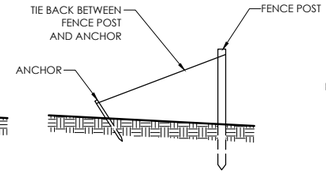

TIE BACK DETAIL

WHEN REQUIRED BY ENGINEER

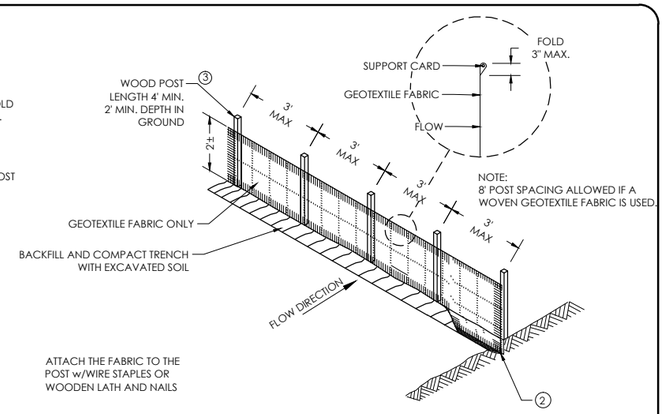

ATTACH THE FABRIC TO THE POST w/WIRE STAPLES OR WOODEN LATH AND NAILS

SILT FENCE

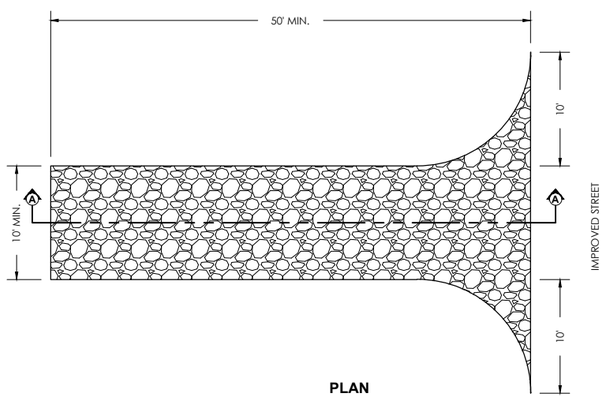

PLAN

NOTE:
MAINTAIN THE ROCK ENTRANCE TO PREVENT TRACKING ONTO PAVEMENT

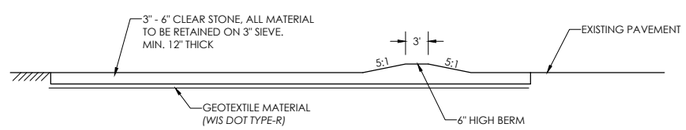

SECTION A-A

ROCK CONSTRUCTION ENTRANCE

INSTALLATION NOTES:

TYPE D

- DO NOT INSTALL INLET PROTECTION TYPE D IN INLETS SHALLOWER THAN 30", MEASURED FROM THE BOTTOM OF THE INLET TO THE TOP OF THE GRATE.
- THE INSTALLED BAG SHALL HAVE A MINIMUM SIDE CLEARANCE, BETWEEN THE INLET WALLS AND THE BAG, MEASURED AT THE BOTTOM OF THE OVERFLOW HOLES, OF 3". WHERE NECESSARY THE CONTRACTOR SHALL CINCH THE BAG, USING PLASTIC ZIP TIES, TO ACHIEVE THE 3" CLEARANCE. THE TIES SHALL BE PLACED AT A MAXIMUM OF 4" FROM THE BOTTOM OF THE BAG.

GENERAL NOTES:

MANUFACTURED ALTERNATIVES APPROVED AND LISTED ON WIS DOT PRODUCT ACCEPTABILITY LIST MAY BE SUBSTITUTED.

WHEN REMOVING OR MAINTAINING INLET PROTECTION, ARE SHALL BE TAKEN SO THAT THE SEDIMENT TRAPPED ON THE GEOTEXTILE FABRIC DOES NOT FALL INTO THE INLET. ANY MATERIAL FALLING INTO THE INLET SHALL BE REMOVED IMMEDIATELY.

1. FINISHED SIZE, INCLUDING FLAP POCKETS WHERE REQUIRED SHALL EXTEND A MINIMUM OF 10" AROUND THE PERIMETER TO FACILITATE MAINTENANCE OR REMOVAL.
2. FOR INLET PROTECTION, TYPE C (WITH CURB BOX), AN ADDITIONAL 18" OF FABRIC IS WRAPPED AROUND THE WOOD AND SECURED WITH STAPLES. THE WOOD SHALL NOT BLOCK THE ENTIRE HEIGHT OF THE CURB BOX OPENING.
3. FLAP POCKET SHALL BE LARGE ENOUGH TO ACCEPT A WOOD 2" x 4".

NOTES

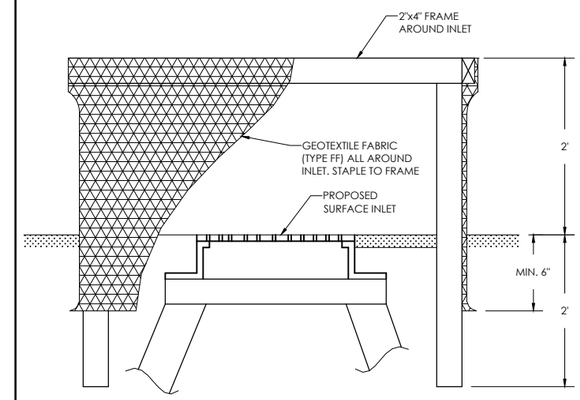

INLET PROTECTION, TYPE A

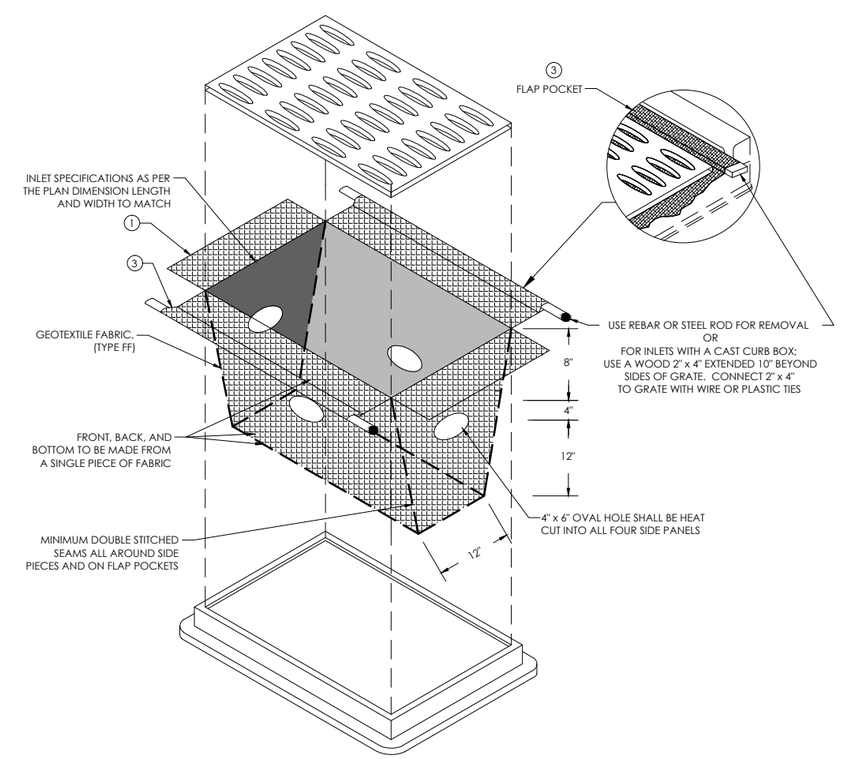

INLET PROTECTION, TYPE D

GEC
General Engineering Company
P.O. Box 340 • 916 Silver Lake Dr. • Portage, WI 53901
608-742-2169 (Office) • 608-742-2592 (Fax)
www.generalengineering.net

This document contains confidential or proprietary information of General Engineering Company. Neither this document nor the information contained therein may be reproduced or disclosed either in whole or in part except as specifically authorized by General Engineering Company.

EROSION CONTROL DETAILS
2016 Street & Utility Improvements
City of Portage

City of Portage
Columbia County, WI

DATE	BY	NO.	REVISIONS

AS NOTED
SCALE

DRAWN BY BRU
DATE Dec. 21, 2015
GEC FILE NO. 2-0115-1F
SHEET NO.
C5.0

G:\Current Files L-Q\Portage\2015 Projects\2-0115-1F 2016 Utility Reconstruction Project\CAD 2-0115-1F\2_CIVIL\Production Drawings\DT-2-0115-1F-ErosionControl.dwg, 12/21/2015 11:55:18 AM

PRELIMINARY NOT FOR CONSTRUCTION

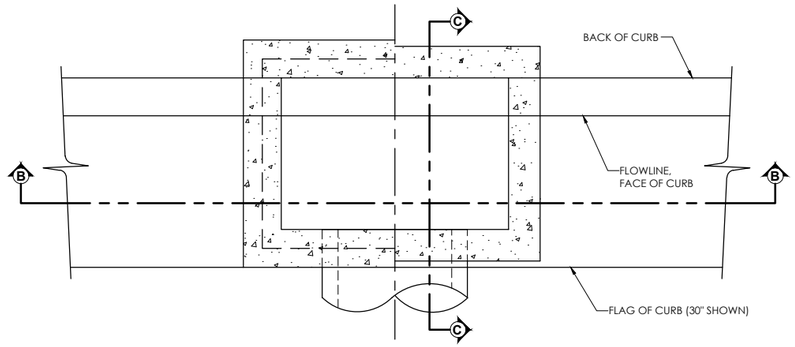

PLAN

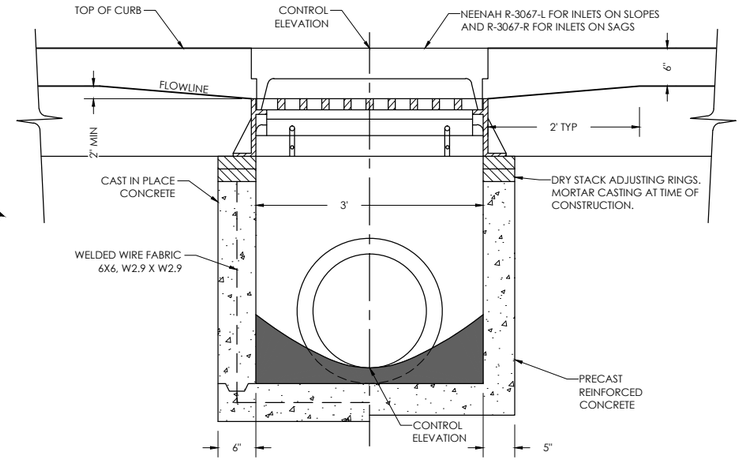

SECTION B-B

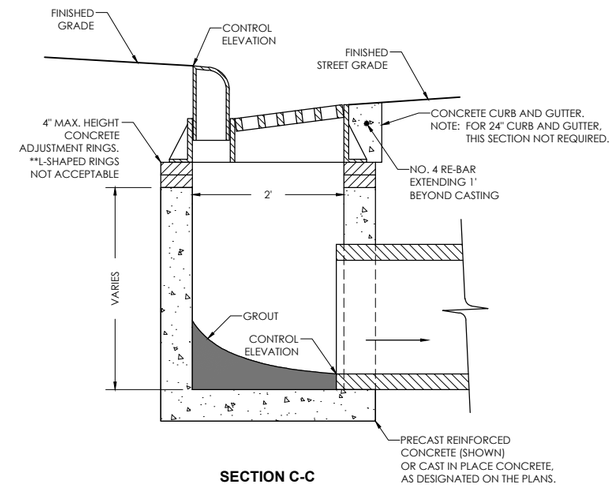

SECTION C-C

2'x3' CURB INLET

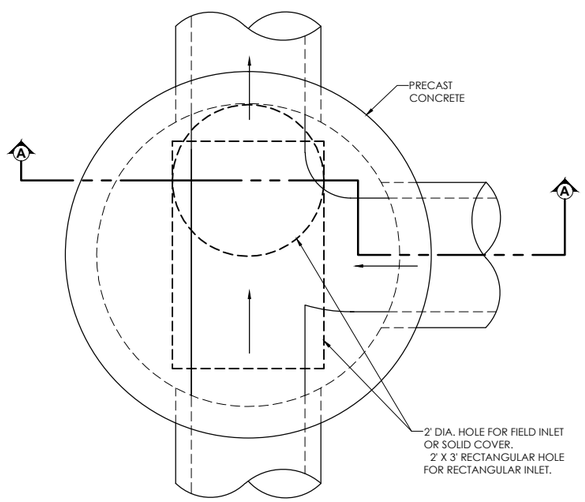

PLAN

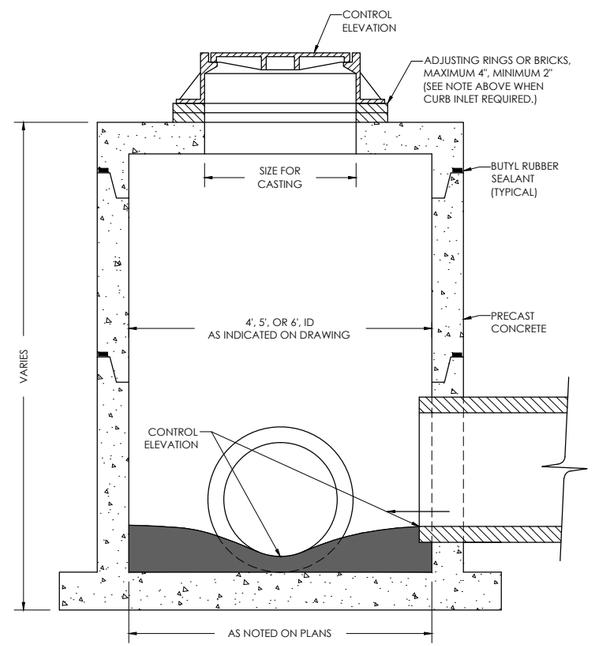

SECTION A-A
CIRCULAR

MANHOLE / INLET NOTES:

1. CURB INLET: NEENAH R-3067-L FOR INLETS ON SLOPES, NEENAH R-3067-R FOR INLETS ON SAGS AND NEENAH R-3290-A FOR INLETS IN DRIVEWAY.
2. FIELD INLET: NEENAH R-2501, TYPE C LID, OR EQUAL.
3. SOLID COVER: NEENAH R-1556 WITH TYPE B NON-ROCKING LID.
4. BEEHIVE INLET: NEENAH R-2560-E5 OR EQUAL.
5. WHEN MH CASTING IS USED, AN ECCENTRIC CONE TOP SHALL BE USED IF MH HAS ENOUGH DEPTH.
6. PROVIDE MANHOLE STEPS, 16" O.C. FOR STRUCTURES WHEN DEPTH IS OVER 4'. MANHOLE STEPS SHALL CONFORM TO THE SPECIFICATIONS.

STORM SEWER MANHOLE / INLET

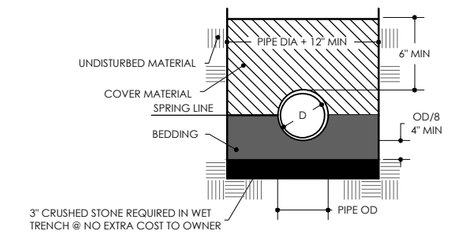

BEDDING AND COVER MATERIAL:

CLASS IA: CLEAN, ANGULAR CRUSHED STONE, CRUSHED ROCK, OR CRUSHED GRAVEL CONFORMING TO THE FOLLOWING GRADATION:

SIEVE SIZE	% PASSING BY WEIGHT
1"	100
3/4"	90-100
3/8"	20-55
NO. 4	0-10
NO. 8	0-5

CLASS IB: CLEAN, ANGULAR CRUSHED STONE, CRUSHED ROCK, OR CRUSHED GRAVEL CONFORMING TO THE FOLLOWING GRADATION:

SIEVE SIZE	% PASSING BY WEIGHT
1/2"	100
3/8"	85-100
NO. 4	10-30
NO. 200	0-5

CLASS II: CLEAN COARSE-GRAINED SOILS CLASSIFIED IN ASTM D2487 AS GW, GP, SW, SP.
CLASS III: COARSE-GRAINED SOILS WITH FINES CLASSIFIED IN ASTM D2487 AS GM, GC, SM, SC.

INSTALLATION:
PLACE 4" OF BEDDING MATERIAL BENEATH PIPE. PLACE BEDDING MATERIAL AROUND THE PIPE TO THE SPRING LINE. WORK THE MATERIAL IN AND AROUND THE PIPE BY HAND TO PROVIDE UNIFORM SUPPORT. PLACE COVER MATERIAL CAREFULLY TO A LEVEL 6" ABOVE THE PIPE.

RIGID PIPE BEDDING (RCP)

GEC
General Engineering Company
P.O. Box 340 • 916 Silver Lake Dr. • Portage, WI 53901
608-742-2169 (Office) • 608-742-2592 (Fax)
www.generalengineering.net

This documnt contains confidential or proprietary information of General Engineering Company. Neither this document nor the information herein may be reproduced or disclosed, under any circumstances, either in whole or in part except as specifically authorized by General Engineering Company.

STORM SEWER CONSTRUCTION DETAILS
2016 Street & Utitliy Improvements
City of Portage

City of Portage
Columbia County, WI

REVISIONS	NO.	BY	DATE

AS NOTED
SCALE

DRAWN BY BRU
DATE Dec. 21, 2015
GEC FILE NO. 2-0115-1F
SHEET NO.
C6.0

G:\Current Files I-Q\Portage\2015 Projects\2-0115-1F 2016 Utility Reconstruction Project\CAD 2-0115-1F\2_CIVIL\Production Drawings\DT-2-0115-1F-Storm.dwg, 12/21/2015 11:56:27 AM

PRELIMINARY NOT FOR CONSTRUCTION

NOTES:

1. 6" SPACING MAX.
2. HINGED CONNECTOR PLATE w/ ANCHOR ATTACHED AT THREE POINTS TO ENDWALL.

RECOMMENDED GRATE SIZING (RCP) *

ENDWALL SIZE	BAR DIAMETER	ANCHOR DIAMETER	H HEIGHT
12"	¾"	⅝"	2½"
15"	¾"	⅝"	3"
18"	¾"	⅝"	4"
21"	1"	⅝"	4"
24"	1"	⅝"	4"
27"	1"	⅝"	5"
30"	1"	⅝"	5"
36"	1"	⅝"	5"
42"	1"	⅝"	6"
48"	1¼"	⅝"	6"
54"	1¼"	⅝"	6"
60"	1¼"	⅝"	7"
66"	1¼"	⅝"	7"
72"	1¼"	⅝"	7"
84"	1¼"	⅝"	8"

* *SIZES MAY VARY PER MANUFACTURER*

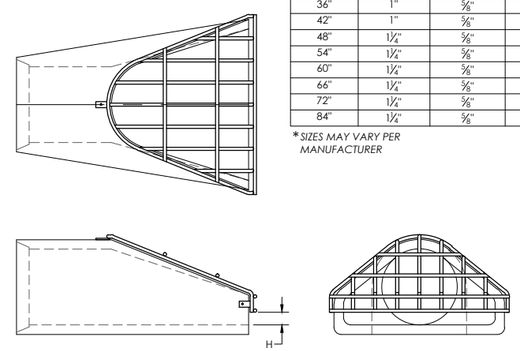

RCP

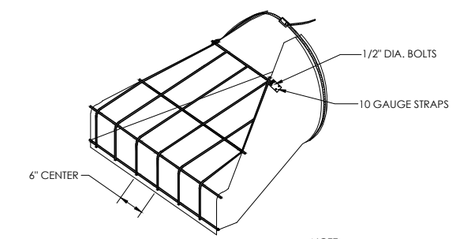

NOTE:

1. HDPE OR PVC PIPE SHALL UTILIZE CMP ENDWALLS.

CMP/HDPE

TYPICAL END-SECTION GRATE

(PROVIDE GRATES ON ALL END-SECTIONS FOR PIPES LARGER THAN 12" DIA.)

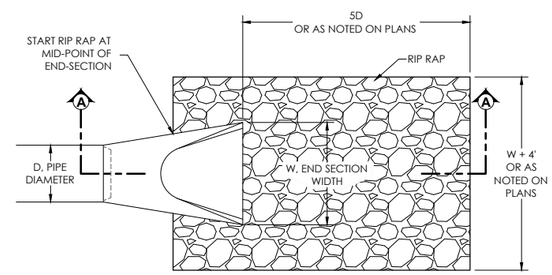

PLAN VIEW

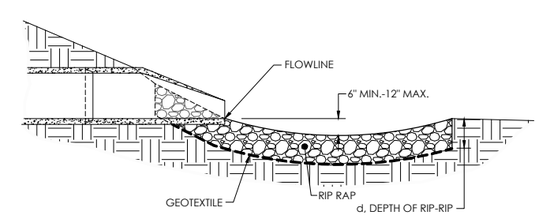

SECTION A-A

RCP PIPE

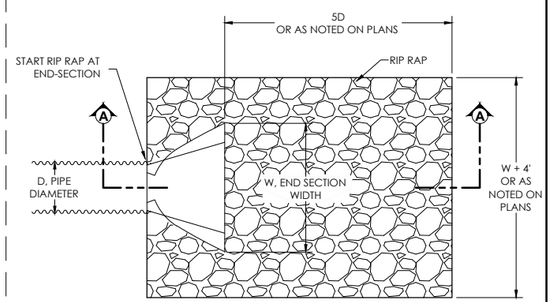

PLAN VIEW

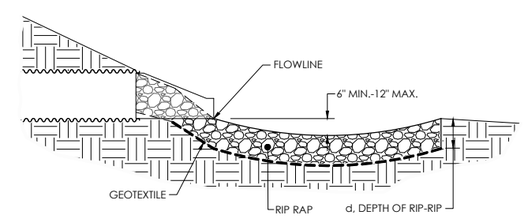

SECTION A-A

CMP/HDPE PIPE

RIP RAP CLASS	WIS DOT RIP RAP EQUIVALENT	d, DEPTH
1	--	9"
2	LIGHT	18"
3	HEAVY	27"
4	EXTRA HEAVY	36"

RIP RAP AT PIPE DISCHARGE

GEC

General Engineering Company

P.O. Box 340 • 916 Silver Lake Dr. • Portage, WI 53901

608-742-2169 (Office) • 608-742-2592 (Fax)

www.generalengineering.net

This document contains confidential or proprietary information of General Engineering Company. Neither this document nor the information herein may be reproduced or disclosed, in whole or in part, or used for any purpose other than that for which it is expressly authorized by General Engineering Company.

STORM SEWER CONSTRUCTION DETAILS

2016 Street & Utitliy Improvements

City of Portage

City of Portage
Columbia County, WI

REVISIONS	NO.	BY	DATE

AS NOTED

SCALE

DRAWN BY BRU

DATE Dec. 21, 2015

GEC FILE NO. 2-0115-1F

SHEET NO.

C6.1

G:\Current Files L-Q\Portage\2015 Projects\2-0115-1F 2016 Utility Reconstruction Project\CAD 2-0115-1F\2_CIVIL\Production Drawings\DT-2-0115-1F-Storm.dwg, 12/21/2015 11:55:52 AM

PRELIMINARY NOT FOR CONSTRUCTION

NOTES:

1.) USE OF RISERS GOVERNED BY BASEMENT DEPTH & LOCAL CONDITIONS OR AS DIRECTED BY ENGINEER

2.) LATERAL SHALL END AT PROPERTY LINE UNLESS OTHERWISE DIRECTED BY ENGINEER

3.) DEPTH TO LATERAL & PROPERTY LINE SHALL NOT BE DEEPER THAN NECESSARY TO SERVICE PARCEL

4.) ALL LATERALS TO BE 4" UNLESS OTHERWISE NOTED ON PLANS OR IN SPECIFICATIONS

5.) ALL HOUSE LATERAL CONNECTIONS SHALL BE CONSTRUCTED AS PER THIS DETAIL UNLESS OTHERWISE SHOWN ON PLANS, OR WITH WRITTEN APPROVAL OF THE ENGINEER

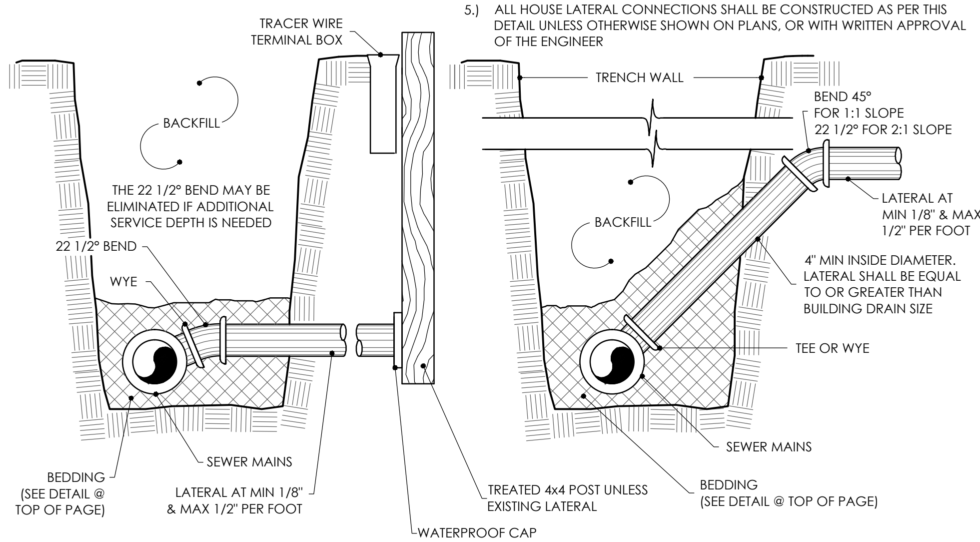

TYPICAL LATERAL CONNECTIONS

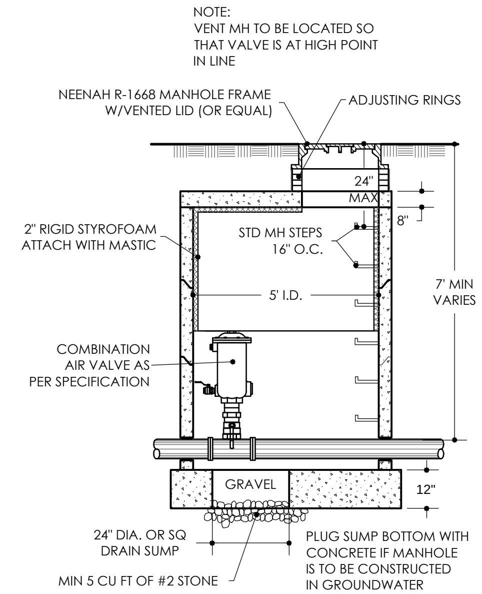

SECTION A-A

STANDARD VENT MH

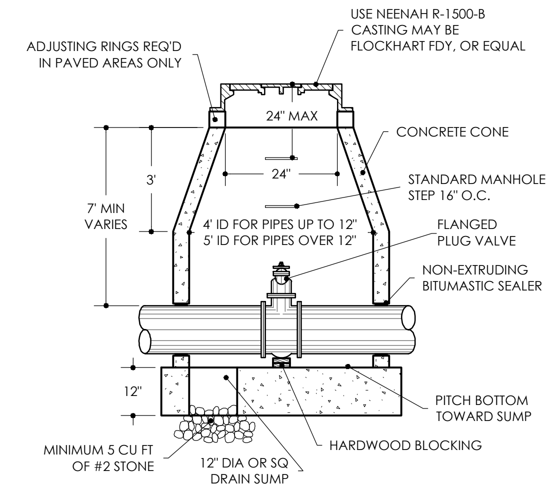

SECTION B-B

STANDARD VALVE MH

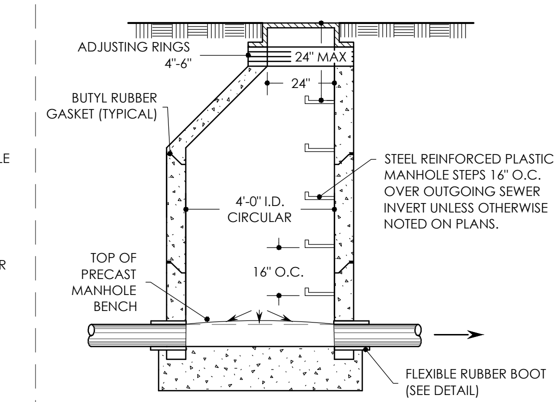

STANDARD PRECAST MH

TYPICAL MANHOLES

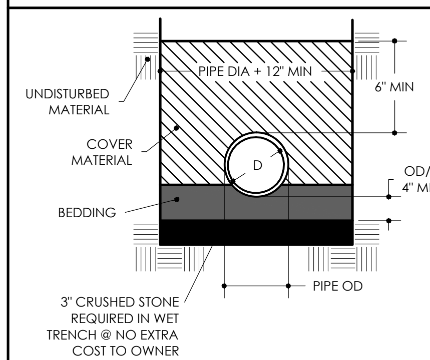

BEDDING AND COVER MATERIAL:
CLASS B: CRUSHED STONE OR GRAVEL CONFORMING TO FOLLOWING GRADATION:

SIEVE SIZE	% PASSING BY WEIGHT
1"	100
3/4"	90-100
3/8"	20-55
NO. 4	0-10
NO. 8	0-5

CLASS C: EXCAVATED COARSE-GRAINED SOILS, TYPES GW, GP, SW, SP GM, GC, SM, AND SC; CLASS B BEDDING; OR PIT RUN SAND.

INSTALLATION:
PLACE AND COMPACT BEDDING AND COVER IN MAXIMUM 6" LAYERS. WORK MATERIAL IN AND AROUND PIPE BY HAND TO PROVIDE UNIFORM SUPPORT.

RIGID PIPE

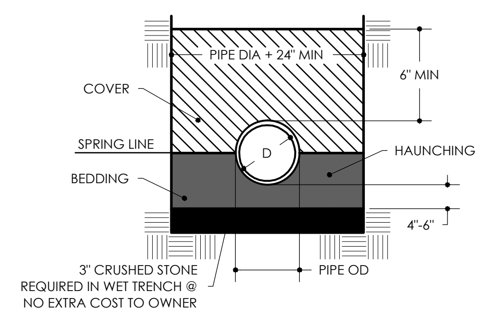

BEDDING AND COVER MATERIAL:
CLASS IA: CRUSHED STONE OR GRAVEL CONFORMING TO FOLLOWING GRADATION:

SIEVE SIZE	% PASSING BY WEIGHT
1"	100
3/4"	90-100
3/8"	20-55
NO. 4	0-10
NO. 8	0-5

CLASS IB: CRUSHED STONE OR GRAVEL CONFORMING TO FOLLOWING GRADATION:

SIEVE SIZE	% PASSING BY WEIGHT
1/2"	100
3/8"	85-100
NO. 4	10-30
NO. 8	0-5

CLASS II: SAND, GRAVELS, AND SAND-GRAVEL MIXTURES WITH LITTLE OR NO FINES. SOIL TYPES GW, GP, SW, AND SP.
CLASS III: SANDS, GRAVELS, AND SAND-GRAVEL MIXTURES WITH FINES. SOIL TYPES GM, GC, SM, AND SC.

INSTALLATION:
PLACE AND COMPACT BEDDING AND COVER IN MAXIMUM 6" LAYERS. WORK MATERIAL IN AND AROUND PIPE BY HAND TO PROVIDE UNIFORM SUPPORT. COMPACT CLASS IB WITH HAND TAMPER OR VIBRATORY COMPACTOR TO 85% STANDARD PROCTOR, COMPACT CLASS II WITH VIBRATORY COMPACTOR TO 85% STANDARD PROCTOR, COMPACT CLASS III WITH VIBRATORY COMPACTOR TO 90% STANDARD PROCTOR.

FLEXIBLE (PVC) PIPE

TYPICAL PIPE BEDDING

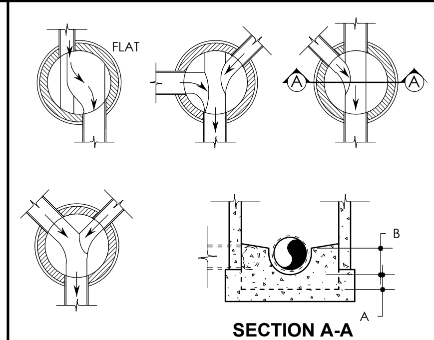

A.) 4" MIN WHEN INTEGRAL BASE IS USED

B.) 2/3 DIA., MIN 6"

NOTE:
BENCH SLOPE: MINIMUM OF 2" PER FOOT

TYPICAL MANHOLE INVERTS

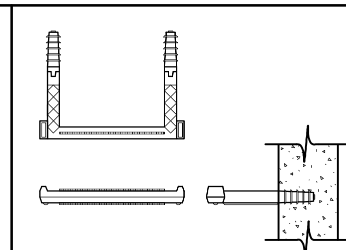

NOTES:

1. MINIMUM DESIGN LIVE LOAD SHALL BE A SINGLE CONCENTRATED LOAD OF 300 LBS. VERTICALLY AND 200 LBS. PULL OUT.
2. STEPS MUST BE EQUALLY SPACED VERTICALLY IN THE ASSEMBLED MANHOLE AT A MAXIMUM DESIGN DISTANCE OF 16" APART.
3. STEPS SHALL BE FABRICATED OF COPOLYMER POLYPROPYLENE THAT ENCAPSULATES A DEFORMED 1/2" GRADE 60 REINFORCING ROD.

TYPICAL STEP DETAIL

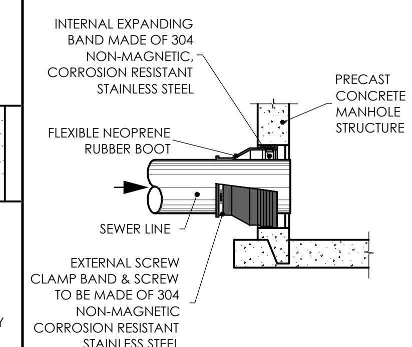

FLEX PIPE TO MH

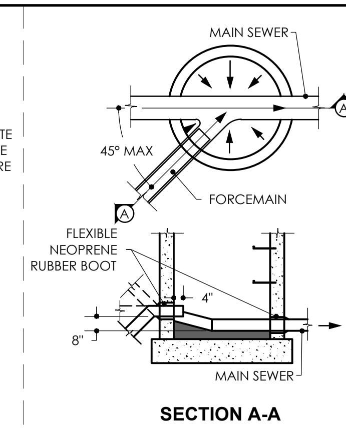

SECTION A-A

FORCEMAIN TO MH

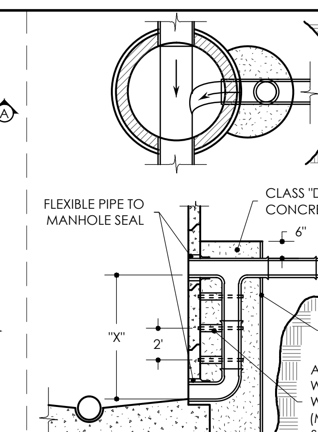

NOTES:

1. F.L. OF DROP TO BE SET AT SAME ELEVATION AS SPRING LINE OF MAIN.
2. PIPE DROP TO BE SAME DIA AS INCOMING SEWER INCLUDING 24" DIA (SPECIAL DESIGN FOR GREATER THAN 24" DIA.)

OUTSIDE DROP TO MH

TYPICAL MANHOLE CONNECTIONS

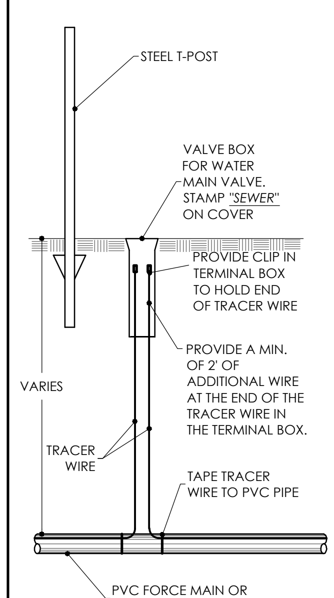

TRACER WIRE TERMINAL BOX

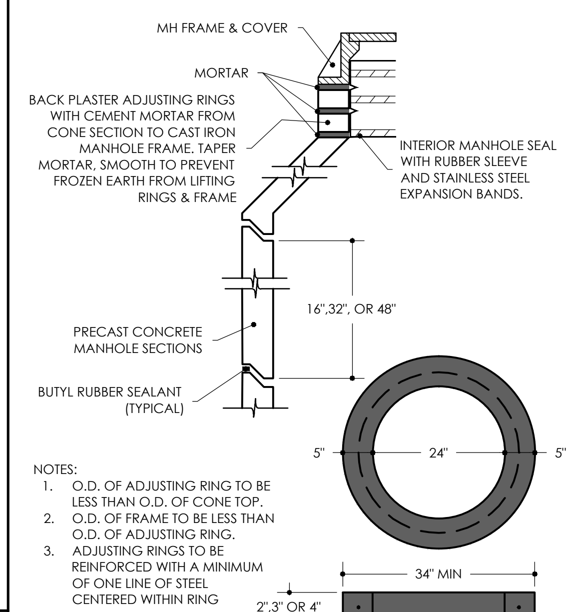

NOTES:

1. O.D. OF ADJUSTING RING TO BE LESS THAN O.D. OF CONE TOP.
2. O.D. OF FRAME TO BE LESS THAN O.D. OF ADJUSTING RING.
3. ADJUSTING RINGS TO BE REINFORCED WITH A MINIMUM OF ONE LINE OF STEEL CENTERED WITHIN RING

FRAME AND JOINT SEALING DETAIL

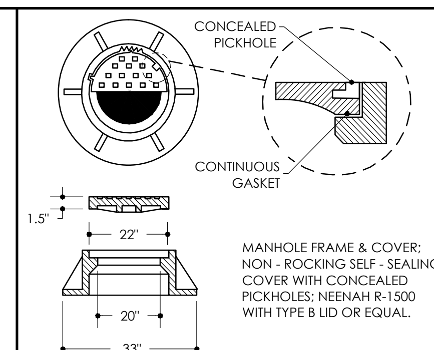

MANHOLE FRAME & COVER; NON - ROCKING SELF - SEALING COVER WITH CONCEALED PICKHOLES; NEENAH R-1500 WITH TYPE B LID OR EQUAL.

TYPICAL FRAME & COVER

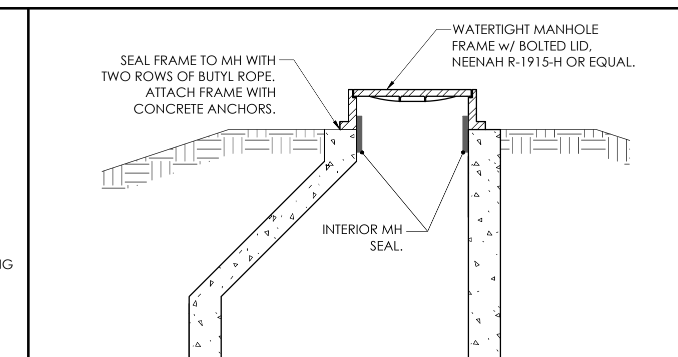

WATERTIGHT MANHOLE DETAIL

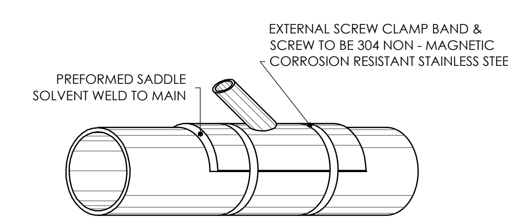

SADDLE INSTALLATION:

1.) MARK OUTLINE OF HOLE ON PIPE WITH TEMPLATE
2.) USE KEYHOLE OR SLOW SPEED SABER SAW TO CUT HOLE, DO NOT START HOLE WITH A HAMMER !
3.) APPLY PRIMER & CEMENT LIBERALLY TO CLEAN DRY SURFACE OF PIPE & UNDERSIDE OF SADDLE
4.) IMMEDIATELY PLACE SADDLE ON PIPE & PROCEED TO TIGHTEN THE TWO STAINLESS STEEL BANDS AROUND PIPE

STANDARD PIPE SADDLE FOR WYE SERVICE CONNECTION TO SEWER

GEC
General Engineering Company
P.O. Box 340 • 916 Silver Lake Dr. • Portage, WI 53901
608-742-2169 (Office) • 608-742-2592 (Fax)
www.generalengineering.net

This document contains confidential or proprietary information of General Engineering Company. Neither this document nor the information herein is to be reproduced, distributed, used or disclosed either in whole or in part except as specifically authorized by General Engineering Company.

SANITARY SEWER CONSTRUCTION DETAILS

2016 Street & Utility Improvements
City of Portage

City of Portage
Columbia County, WI

DATE	BY	NO.	REVISIONS

AS NOTED
SCALE

DRAWN BY BRU
DATE Dec. 21, 2015
GEC FILE NO. 2-0115-1F
SHEET NO.
C7.0

G:\Current Files L-Q\Portage\2015 Projects\2-0115-1F 2016 Utility Reconstruction Project\CAD 2-0115-1F\2_CIVIL\Production Drawings\DT-2-0115-1F-Sanitary.dwg, 12/21/2015 11:57:39 AM

PRELIMINARY NOT FOR CONSTRUCTION

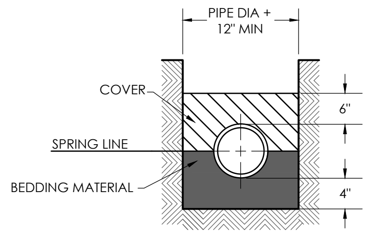

INSTALLATION:
PLACE 4" OF BEDDING MATERIAL BENEATH PIPE. PLACE BEDDING MATERIAL AROUND THE PIPE TO THE SPRING LINE. WORK THE MATERIAL IN AND AROUND THE PIPE BY HAND TO PROVIDE UNIFORM SUPPORT. PLACE COVER MATERIAL CAREFULLY TO A LEVEL 6" ABOVE THE PIPE.

BEDDING AND COVER:
CLASS IA - CLEAN, ANGULAR CRUSHED STONE, CRUSHED ROCK, OR CRUSHED GRAVEL CONFORMING TO THE FOLLOWING GRADATION:

SIEVE SIZE	% PASSING BY WEIGHT
1"	100
3/4"	90-100
3/8"	20-55
NO. 4	0-10
NO. 8	0-5

CLASS IB- CLEAN, ANGULAR CRUSHED STONE, CRUSHED ROCK, OR CRUSHED GRAVEL CONFORMING TO THE FOLLOWING GRADATION:

SIEVE SIZE	% PASSING BY WEIGHT
1/2"	100
3/8"	85-100
NO. 4	10-30
NO. 200	0-5

CLASS II- CLEAN COARSE-GRAINED SOILS CLASSIFIED IN ASTM D2487 AS GW, GP, SW, SP.
CLASS III- COARSE-GRAINED SOILS WITH FINES CLASSIFIED IN ASTM D2487 AS GM, GC, SM, SC.

STANDARD WATER MAIN TRENCH

NOTE:
PROVIDE JOINT RESTRAINT.

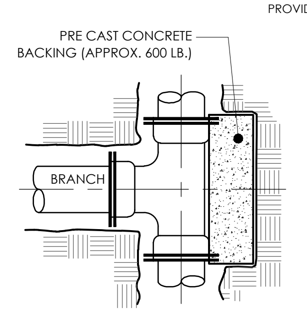

PLAN - @ TEES

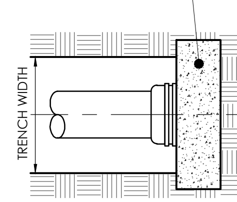

PLAN - @ DEAD ENDS

CONCRETE BACKING

NOTE:
PROVIDE JOINT RESTRAINT.

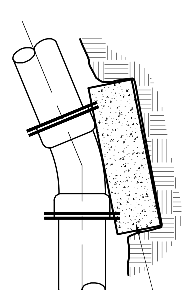

PLAN - 22.5° BEND

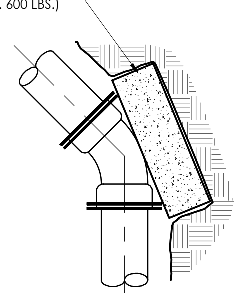

PLAN - 45° BEND

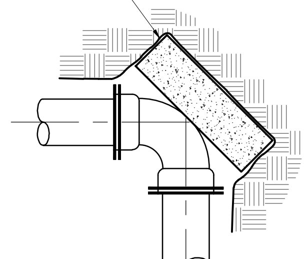

PLAN - 90° BEND

CONCRETE BACKING FOR BENDS

PIPE DIA	M.H. ID.	ADJ. RING DIA.	NEENAH FRAME NO.
4"-10"	4'-0"	24"	R-1900-B1
12"-14"	*5'-0"	36"	R-1900-D
16"-18"	*5'-0"	40"	R-1900-E

* FLAT TOP M.H. (NO CONE SECTION)

USE ONLY WHEN REQUIRED BY CONTRACT DOCUMENTS

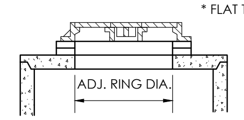

FLAT TOP

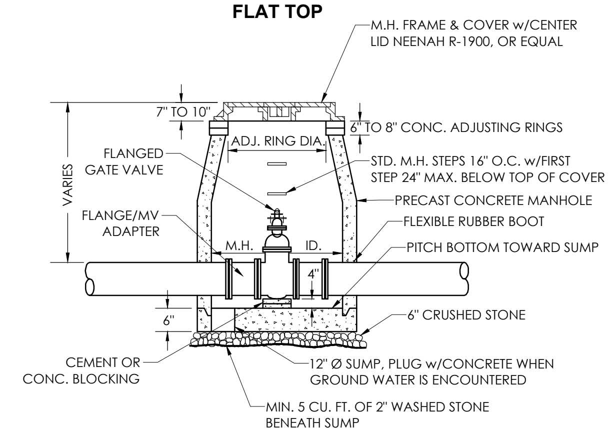

STANDARD VAULT FOR GATE VALVES

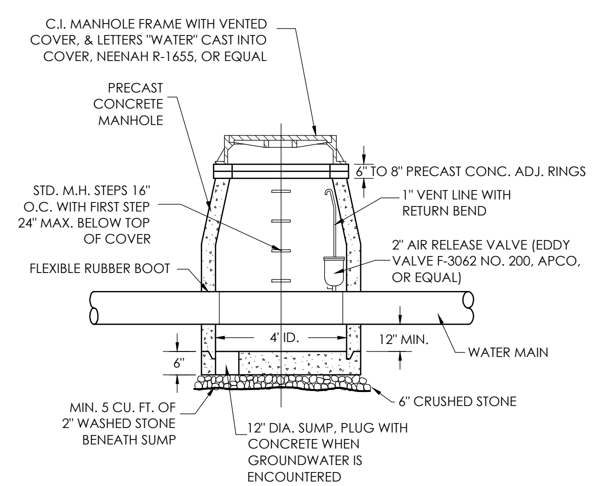

AIR RELEASE VAULT

STRAPPING MATERIAL						
PIPE SIZE	D	RODS NO.	RODS DIA.	STRAP	BOLT DIA.	WASHER
6"	7.10	2	3/4"	1/2"x2"	3/4"	1/2"x3"x5"
8"	9.30	2	3/4"	1/2"x2"	3/4"	"
12"	13.50	2	3/4"	1/2"x2 1/2"	1"	"
16"	17.80	4	3/4"	1/2"x3"	1"	"

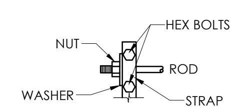

NOTES:
1. PROVIDE JOINT RESTRAINTS & RODS.
2. RODS & WASHERS TO BE ASTM A-575 MERCHANT QUALITY .17-.24 CARBON. NUTS TO BE AM. STD. HEAVY HOT PRESSED. TIE RODS, BOLTS, NUTS, BANDS, AND WASHERS TO BE FURNISHED & APPLIED BY CONTRACTOR. ALL STEEL MATERIAL TO BE THOROUGHLY COATED WITH BITUMASTIC CARBOLINE KOP-COAT #50 OR EQUAL.

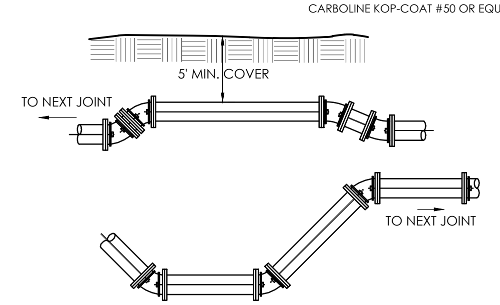

VERTICAL WATER MAIN OFFSETS

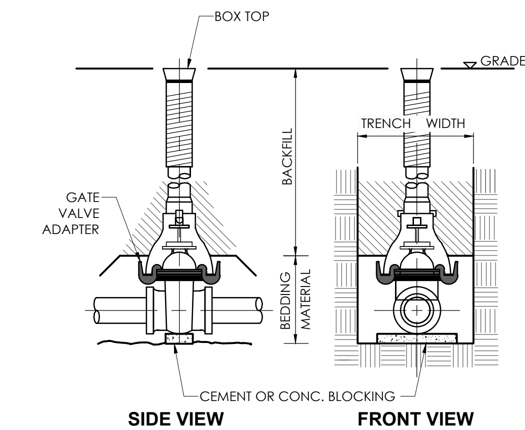

STANDARD GATE VALVE BOX SETTING

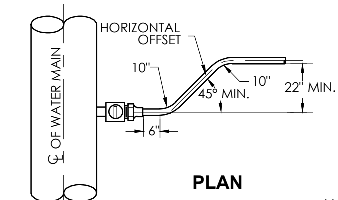

PLAN

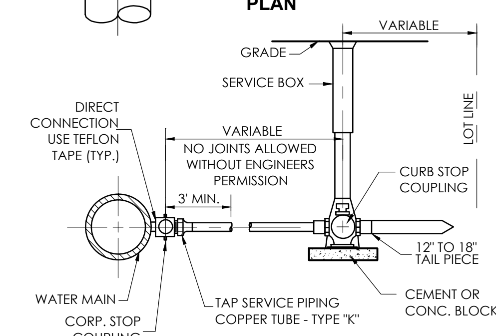

ELEVATION

SERVICE PIPE	CORP. STOP	CURB STOP	SERVICE BOX
1"	1"	1"	2 1/2"
1 1/4"	1 1/4"	1 1/4"	3"
1 1/2"	1 1/4" x 1 1/2"	1 1/2"	3"
* 2"	1 1/2" x 2"	2"	3"

* A 2" TAP ON A 6" DIAMETER MAIN REQUIRES A DOUBLE STRAP SERVICE SADDLE.

TAP SERVICE PIPING (COPPER)

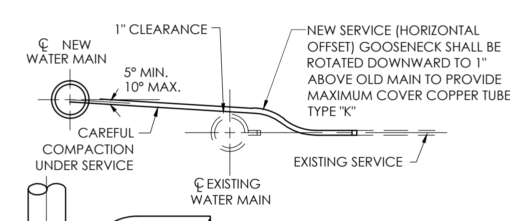

1 1/4", 1 1/2", & 2" SERVICE

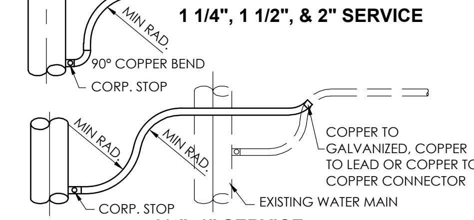

3/4", 1" SERVICE

NOTES:
1. WATER SERVICE MAY BE INSTALLED UNDER EXISTING WATER MAIN.
2. IF 6' MIN. COVER IS NOT AVAILABLE, THE NEW INSTALLATION SHALL BE INSULATED.
3. CONNECTIONS SHALL BE TESTED FOR LEAKAGE PRIOR TO BACKFILL AFTER SUPPORT HAS BEEN COMPACTED.
4. PIPE SIZE MIN. RADII ARE AS FOLLOWS:
3/4"=6", 1"=6", 1 1/4"=8", 1 1/2"=10", 2"=12"
5. TAP AND SERVICE SHALL BE SAME SIZE AS EXISTING w/MIN. OF 3/4"

TAP SERVICE PIPING

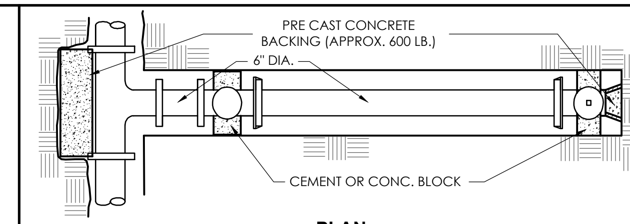

PLAN

PROVIDE JOINT RESTRAINTS AND CONCRETE BACKING.

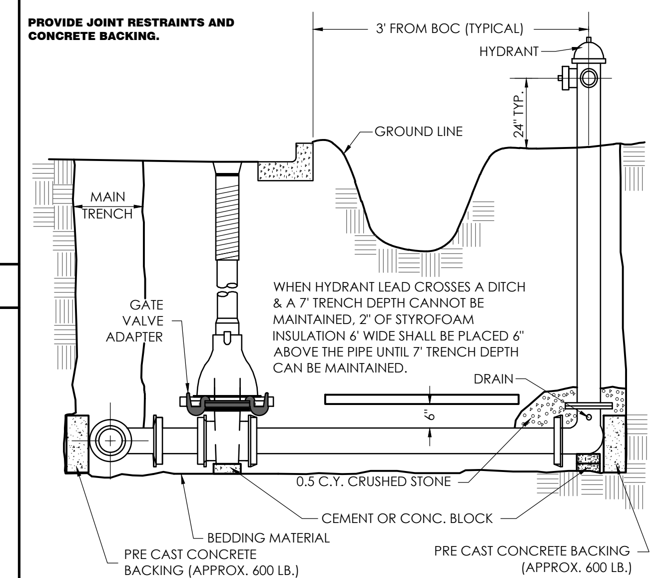

ELEVATION

STANDARD HYDRANT SETTING

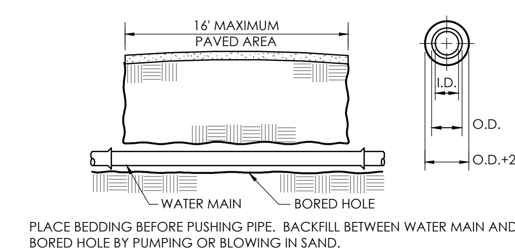

PLACE BEDDING BEFORE PUSHING PIPE. BACKFILL BETWEEN WATER MAIN AND BORED HOLE BY PUMPING OR BLOWING IN SAND.
NO JOINTS PERMITTED WITHIN THE BORE.

BORING WITHOUT CASING PIPE

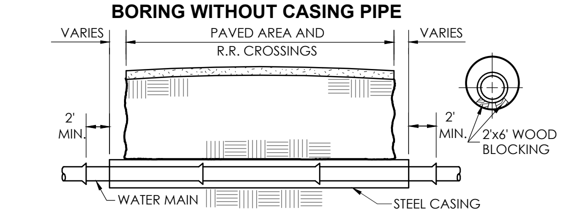

JACKING WITH CASING PIPE

STEEL CASING PIPE ASTM A-53 GRADE B 35,000 PSI MIN.			
SIZE W.M.	CASING MIN. WALL	CASING MIN. DIA.	NOTE
6"	0.312	18"	12" THICK CONCRETE OR BRICK BULKHEADS REQ'D ONLY IN R.R. CROSSING UNLESS OTHERWISE NOTED ON THE PLANS
8"	0.312	18"	
12"	0.375	24"	
16"	0.500	30"	
20"	0.500	36"	
24"	0.562	48"	

BORING OR JACKING w/CASING PIPE

NOTES:
1. SERVICE TAPS IN ALL WATER MAIN PIPE SHALL BE MADE WITH 2 WRAPS OF 3 MIL. TEFLON TAPE ON CORPORATION STOP THREADS.
2. WHEN MORE THAN ONE TAP IN THE MAIN IS NECESSARY TO DELIVER THE REQUIRED FLOW FOR SERVICE LINES, THEY SHOULD BE STAGGERED AROUND THE CIRCUMFERENCE A MINIMUM OR 8" APART.

GENERAL NOTES

GEC
General Engineering Company
P.O. Box 340 • 916 Silver Lake Dr. • Portage, WI 53901
608-742-2169 (Office) • 608-742-2592 (Fax)
www.generalengineering.net

This document contains confidential or proprietary information of General Engineering Company. Neither this document nor the information herein is to be reproduced, distributed, used or disclosed either in whole or in part except as specifically authorized by General Engineering Company.

WATER MAIN CONSTRUCTION DETAILS
2016 Street & Utility Improvements
City of Portage

City of Portage
Columbia County, WI

DATE	BY	NO.	REVISIONS

AS NOTED
SCALE

DRAWN BY BRU
DATE Dec. 21, 2015
GEC FILE NO. 2-0115-1F
SHEET NO.
C8.0

G:\Current Files L-Q\Portage\2015 Projects\2-0115-1F 2016 Utility Reconstruction Project\CAD 2-0115-1F\2_CIVIL\Production Drawings\DT-2-0115-1F-Water.dwg, 12/21/2015 11:57:00 AM

PRELIMINARY NOT FOR CONSTRUCTION

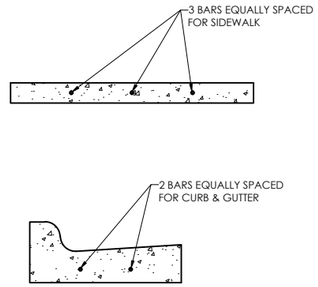

NOTES:

PROVIDE #4 BARS 10' LONG IN CURB & GUTTERS AND SIDEWALKS THAT CROSS UTILITY TRENCHES OR AS DIRECTED BY THE ENGINEER.

CURB & SIDEWALK REINFORCING

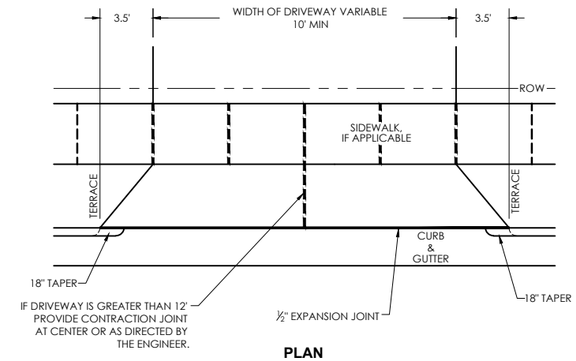

PLAN

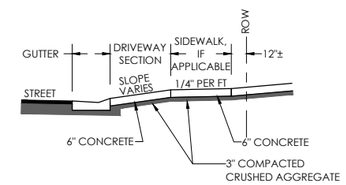

SECTION

TYPICAL DRIVEWAY DETAIL

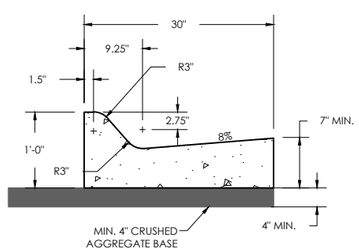

STANDARD ROLL TYPE 30"

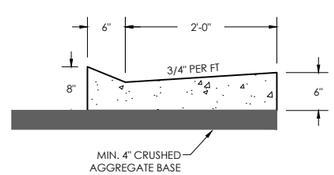

DRIVEWAY SECTION

TYPICAL CURB & GUTTER SECTIONS

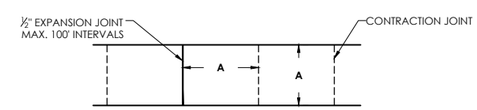

PLAN

NOTES:

1. **A** = 4' OR 5' TYPICALLY (SEE PLANS FOR PROPOSED WIDTH)
2. AREA BETWEEN CURB AND SIDEWALK IS TO HAVE A MINIMUM OF 6" DIFFERENCE IN ELEVATION.

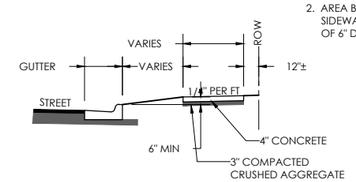

SECTION

TYPICAL SIDEWALK DETAIL

GEC

General Engineering Company

P.O. Box 340 • 916 Silver Lake Dr. • Portage, WI 53901
608-742-2169 (Office) • 608-742-2592 (Fax)
www.generalengineering.net

This documes contains confidential or proprietary information of General Engineering Company. Neither this document nor the information herein is to be reproduced, distributed, used or disclosed either in whole or in part except as specifically authorized by General Engineering Company.

STREET IMPROVEMENT DETAILS

2016 Street & Utility Improvements

City of Portage

City of Portage
Columbia County, WI

DATE	BY	NO.	REVISIONS

AS NOTED
SCALE

DRAWN BY BRU
DATE Dec. 21, 2015
GEC FILE NO. 2-0115-1F
SHEET NO.
C9.0

G:\Current Files L-Q\Portage\2015 Projects\2-0115-1F 2016 Utility Reconstruction Project\CAD 2-0115-1F\2_CIVIL\Production Drawings\DT-2-0115-1F-Street.dwg, 12/21/2015 11:58:15 AM

To: Municipal Services and Utilities Committee

From: Aaron J. Jahncke, P.E., Director of Public Works/ City Engineer

Date: 12/30/15

Subject: **2016 Capital Plan Schedule**

This is the Department Public Works Capital Plan Schedule for 2016. The Department reserves the right to alter the schedule and will update the committee every month in regards to the schedule.

Aaron J. Jahncke
Director of Public Works/ City Engineer

Attachment(s)
Capital Plan Schedules

City of Portage, WI; 2016 Water and Waste Water Capital Projects

12/29/2015

ACCT. NO./PROJECT NO.	DESCRIPTION	Budget	Actual/Bid	2016												Comments
				J	F	M	A	M	J	J	A	S	O	N	D	
100-00-13000-025	P.W./WATER PROJECTS															
	D - REPLACE WATERMAIN ON RIVER ST.; *W. WISCONSIN ST. TO SUMMIT ST.* - 2,300'	$275,000														
	B&G - Construction & Relocation of Utility Maintenance Facility	$1,400,000														
	B&G - Scada Upgrades at New Utility Maintenance Facility	$125,000														
	D - Paint & Repair South (Park St.) Tower	$15,000														
	Columbia County Gateway Project (balance in Streets $30K)	$100,000														
	D - W. Conant St. Watermain Replacement ; *Pierce St. To Summit St. - 3500' - DESIGN*	$18,500														
620-56-53615-820	WASTEWATER PROJECTS															
	C- River St. Sanitary Sewer Replacement; 2,300'	$230,000														
	T&SH - Upgrade screw pumps w/ recoating, new tail shafts and new boards	$300,000														
	T&SH - Replace Chlorine Contact Chamber Sluice Gates	$35,000														Equipment Replacement Fund - DNR
	C - Convert Ray-O-Vac Lift Station to Submersible Pumps	$370,000														Possible relocation may increase costs

Legend:

Consultant Solicitation (if applicable)

Preliminary Design & Permitting (incl. easement acq.)

Final Design & Bidding

Construction or Procurement

City of Portage, WI; 2016 Facility Capital Projects

12/29/2015

ACCT. NO./PROJECT NO.	DESCRIPTION	Budget	Actual/Bid	2016												Comments
				J	F	M	A	M	J	J	A	S	O	N	D	
410-00-51600-821	**MUNICIPAL BUILDING/GROUNDS**															
	Library Alley Door	$4,000														
	Museum Exterior Repairs	$40,000														
	Municipal Bldg Panel Relocation and upgrade	$50,000														
	Special Projects															
	Airport redevelopment and master planning	TBD														

Legend:

Consultant Solicitation (if applicable)

Final Design & Bidding

Preliminary Design & Permitting (incl. easement acq.)

Construction or Procurement

City of Portage, WI; 2016 Public Infrastructure Capital Projects

12/29/2015

ACCT. NO./PROJECT NO.	DESCRIPTION	Budget	Actual/Bid	2016												Comments
				J	F	M	A	M	J	J	A	S	O	N	D	
410-00-57000-820	PUBLIC INFRASTRUCTURE															
	River St. Reconstruction -Street, C&G, Storm Sewer and Sidewalk *(W. Wis to Summit - 3600') and W. Wis Sidewalk*	$800,000														
	Mill and Overlay; River St. *(Summit to Cemetary St.)& Sanborn St. (River St. to W. Franklin)*	$300,000														
	East Mullet St. Reconstruction *(Griffith St. to Morgan St.-600')*	$20,000														
	W. Conant St. Reconstruction ; Street, C&G, Storm, Sidewalk *(Pierce St. To W. Carroll St.; 3500')*	$35,000														
	Columbia County Gateway Project (Remaining Balance in Water)	$30,000														
	Wedge and Overlay on W. Mullet St. and Repl. Conc Pavement w/ 6" of asphalt pavmt on McFarlane from Oneida St to CP RR Tracks	$60,000														
	Pedestrian Crossing at Portage Theatre	$12,000														
	Chip Seal Thompson St. (E. and W. Collins) and Crackfill E. Cook St.	$60,000														
	Alley Resurfacing; 9, 50, 30, & 54	$100,000														
	Silver Lake Cemetary Rd.	$10,000														
	Sidewalk Vault Abandonment at H. of C.	$6,000														
	Jefferson W. Alley Pump Station	$30,000														
	Subway Pump Station Controller	$25,000														
	Storm Sewer Relay; TBD	$25,000														
	Storm Detention Basin - North Side	$100,000														

Legend:

Consultant Solicitation (if applicable)

Final Design & Bidding

Preliminary Design & Permitting (incl. easement acq.)

Construction or Procurement

City of Portage, WI; 2016 Sidewalk, Canal and Equipment Capital Projects

12/29/2015

ACCT. NO./PROJECT NO.	DESCRIPTION	Budget	Actual/Bid	2016												Comments
				J	F	M	A	M	J	J	A	S	O	N	D	
	REVOLVING SIDEWALK															
	WARD 5	$100,000														
	CANAL															
	SEGMENT 2 DESIGN	$100,000														
	Canal Two Bridge Design	$10,000														
	Canal Paths Design	$15,000														
	VEHICLES/EQUIPMENT -															
	PW/P&R Bucket Truck	$120,000														
	PW Dump Truck	$115,000														

Legend:

Consultant Solicitation (if applicable)

Final Design & Bidding

Preliminary Design & Permitting (incl. easement acq.)

Construction or Procurement